PB-214 695

AIR MODULATED VACUUM OIL RECOVERY COLLECTION OF SPILLED OIL (FOAMS)

Clifford Risley

Environmental Protection Agency

Prepared for:

Environmental Protection Agency

August 1972

DISTRIBUTED BY:

NTIS

National Technical Information Service
U. S. DEPARTMENT OF COMMERCE
5285 Port Royal Road, Springfield Va. 22151

EPA-R2-72-033
August 1972

PB 214 695

Environmental Protection Technology Series

W73-05217

Air Modulated Vacuum Oil Recovery Collection of Spilled Oil (Foams)

Office of Research and Monitoring
U.S. Environmental Protection Agency
Washington, D.C. 20460

Reproduced by
NATIONAL TECHNICAL
INFORMATION SERVICE
U.S. Department of Commerce
Springfield VA 22151

RESEARCH REPORTING SERIES

Research reports of the Office of Research and Monitoring, Environmental Protection Agency, have been grouped into five series. These five broad categories were established to facilitate further development and application of environmental technology. Elimination of traditional grouping was consciously planned to foster technology transfer and a maximum interface in related fields. The five series are:

1. Environmental Health Effects Research
2. Environmental Protection Technology
3. Ecological Research
4. Environmental Monitoring
5. Socioeconomic Environmental Studies

This report has been assigned to the ENVIRONMENTAL PROTECTION TECHNOLOGY series. This series describes research performed to develop and demonstrate instrumentation, equipment and methodology to repair or prevent environmental degradation from point and non-point sources of pollution. This work provides the new or improved technology required for the control and treatment of pollution sources to meet environmental quality standards.

SELECTED WATER RESOURCES ABSTRACTS

INPUT TRANSACTION FORM

1. Report No.

W 73-05217

AIR MODULATED VACUUM OIL RECOVERY COLLECTION OF SPILLED OIL (FOAMS),

5. Report Date

6.

8. Performing Organization Report No.

~~Sicka, R. W.~~

EPA Program 15080-EHP

~~City of Cleveland, Ohio~~

12. Type of Report and Period Covered

12. Sponsoring Organization

Technology Series

Environmental Protection ~~Agency~~ Report No. EPA-R2-72-033, August , 1972. 57 p, 22 fig, 15 tab., 11 ref.

~~The~~ An air modulated vacuum oil recovery technique was developed in an experimental and engineering design project as a method of collecting oil spilled on water. The prototype device possessing a self contained power source proved capable of rapidly recovering thin slicks of oil (< 4 mm) from water surfaces with only a small amount of water present (< 10% by volume) in the recovered oil. The prototype recovered oil at the rate of 450 gal/hr for a thin oil slick. Thicker slicks could be recovered much more rapidly. (Smith-Texas)

17a. Descriptors

*Oil spills, *Oil pollution, *Oil wastes, *Water pollution, Water treatment, Separation techniques, Water pollution control, Pollution abatement, Water pollution sources

17b. Identifiers

*Recovery techniques, *Oil skimming, *Air modulated vacuum recovery

05D

Copy available from GPO Sup Doc as EP 1.2/2, $0.25 ; microfiche from NTIS as PB [illegible], $0.95.

19. Security Class. (Report)

20. Security Class. (Page)

21. No. of Pages

22. Price

Send To:

WATER RESOURCES SCIENTIFIC INFORMATION CENTER
U.S. DEPARTMENT OF THE INTERIOR
WASHINGTON, D. C. 20240

Richard M. Smith, Jr. | Texas Univ, Austin

EPA-R2-72-033
August 1972

AIR MODULATED VACUUM OIL RECOVERY

COLLECTION OF SPILLED OIL (FOAMS)

Project 15080 EHP

Project Officer

Clifford Risley
EPA - Region V
1 North Wacker Drive
Chicago, Illinois 60606

Prepared for

OFFICE OF RESEARCH AND MONITORING
U.S. ENVIRONMENTAL PROTECTION AGENCY
WASHINGTON, D.C. 20460

For sale by the Superintendent of Documents, U.S. Government Printing Office, Washington, D.C. 20402 - Price 75 cents

EPA Review Notice

This report has been reviewed by the Environmental Protection Agency, and approved for publication. Approval does not signify that the contents necessarily reflect the views and policies of the Environmental Protection Agency, nor does mention of trade names or commercial products constitute endorsement or recommendation for use.

ABSTRACT

A method of oil harvesting was developed involving the air modulated vacuum oil recovery technique. The collection of thin oil slicks from water surfaces by the method of oil foam generation and air modulation of vacuum oil recovery was developed in an experimental and engineering design project. This resulted through construction of a prototype device which has proved capable of rapidly recovering thin slicks of oil from water surfaces. Very little water is present in the recovered oil (<10% by volume).

The range of application of vacuum oil recovery has been successfully extended to thin oil slicks (<4 mm) through the application of controlled air modulation and oil foam generation. The prototype device was designed for remote operation and hence possesses self contained power sources.

The two foot diameter prototype demonstrated performance by treating 7500 gallons of oil and water in a test tank in 4 minutes and recovering the oil at the rate of 450 gal/hr from this very thin oil slick. Thicker slicks could be recovered much more rapidly.

The capabilities of treating much greater quantities of oil/water by this prototype device are discussed.

This report was submitted in fulfillment of Project Number 15080EHP under the sponsorship of the Environmental Protection Agency and The City of Cleveland, Ohio.

CONTENTS

Section		Page
I	Conclusions	1
II	Recommendations	3
III	Introduction	5
IV	Experimental - Phase I	7
V	Design Engineering and Working Model Construction - Phase II	33
VI	Discussion	49
VII	Acknowledgements	55
VIII	References	57

Preceding page blank

FIGURES

		Page
1	Bench Scale Apparatus	9
2	Apparatus for Examination of Oil/Water-to-Aerator	18
3	Apparatus for Evaluation of Oil/Water Content of Foams	19
4	Drawing of Oil Foam Collection Apparatus	22
5	Photograph of Bench Scale Apparatus for Horizons' Air Modulated Vacuum Oil Recovery	23
6	Photograph of Apparatus after 1 Min. into Experimental Recovery of an 8 mm Thick Slick of Louisiana Crude Oil	23
7	Photograph of Foam Generation and Close-Up of Vacuum Recovery Head	24
8	Photograph of Tank Surface Illustrating Manner of Oil Removal by Experimental Apparatus	24
9	Schematic of Large Laboratory Scale Experiment	32
10	Nucleus of Air Modulated Vacuum Oil Recovery	35
11	Schematic of AMVOR Device and System Elements	36
12	Plan View of AMVOR Device	37
13	Schematic Diagram of Air Distribution Manifold	38
14	Schematic Diagram of System Control Elements	39
15	Plan View of Accessory Element. Vacuum Reservoir and Air Ejector	40
16	Flow Regime Pattern in Device Vicinity	41
17	Floor Plan-Test Area	44
18	Photograph of AMVOR Device in Test Tank	45
19	Photograph of Oil Recovery Operation with AMVOR Device (View A)	46

FIGURES (continued)

		Page
20	Photograph of Oil Recovery Operation with AMVOR (View B)	46
21	Plan of AMVOR Device in Field Operation with Catamaran Work Boat	50
22	Oblique Aerial View of Cuyahoga River Valley and Cleveland Harbor Showing Oil Accumulation	53

TABLES

No.		Page
1	Surfactant Types	8
2a	Foam Stability Tests on Oils	10
2b	Foam Stability Tests on Heavy Louisiana Crude	11
2c	Foam Stability Tests on Louisiana Crude Oil + Surfactants	12
2d	Foam Stability Tests on Louisiana Crude + Surfactants + Water	13
3	Effect of Surfactant Concentration on Foam Properties	15
4	Examination of Effect of Oil/Water Interface to Aerator Separation on Foaming Properties	17
5	Oil/Water Content of Foams	20
6	Oil Removal (1536-18)	25
7	Oil Removal (1536-13)	26
8	Oil Removal (1536-20)	27
9	Oil Removal (1536-23)	28
10	Oil Removal (1536-24)	29
11	Oil Removal (1536-41)	30
12	Oil Removal	31
13	Design Data	33
14	Results of AMVOR Device Oil Recovery Tests	43
15	Summary of AMVOR Device Specifications	51

SECTION I

CONCLUSIONS

An air modulated-vacuum oil recovery (AMVOR) system was examined in laboratory studies. The goal of the system was the development of a technique for the rapid recovery of spilled oil with the aid of foam.

Laboratory tests were conducted to evaluate various oil foam generating surfactants and water-oil systems. Surfactant materials were selected and studied under bench scale conditions and individual criteria developed to rate their effectiveness. Several of the systems were promising on the small scale in that they produced very rich oil foams that were recovered by simple vacuum recovery techniques. Evaluation of these systems on a larger scale proved additionally promising and permitted the collection of design data. Such data permitted the projection of the design of the working model to be constructed in the second phase of this program:

The results of this first phase experimental program may be briefly summarized as follows:

1. Several oils were found to possess foaming properties by themselves (See Table IIa).

2. Certain oil/water systems have shown foaming properties.

3. A number of non-toxic surfactants have been evaluated which enhance the foaming of the oil in the presence of water and produce oil rich foams. The surfactants which showed the most promise in enhancing foam production were n-amyl alcohol and 4-methyl 2 pentanol. These are soluble in oil and insoluble in water and hence will remain in the oil.

4. Most important of all, the foaming and recovery of the oil by air-modulated vacuum suction has shown very promising results as summarized in Table V. In many cases the water content of the recovered oil is well below the acceptable limit of 10% water content. The recovery process appears to be quite rapid.

Design, engineering, construction and testing were carried out in the second phase of this program. The results of testing of the completed device may be summarized as follows:

1. The device performed very well in the case of rapidly removing thin (<4 mm) oil slicks by vacuum oil collecting and foam generation. The vacuum recovery of the oil slicks proceeded at the rate of 450 gal/hr of oil.

2. Water disturbances (due to water pump exhaust) were encountered in the test tank and the device collected the oil at reasonable rates.

3. The oil collected in several experiments was found to contain low water contents (<10%).

4. The performance of the device in the 18' test tank indicates outstanding potential of the device for field testing.

5. The cost of the device as constructed under this program is estimated to be $5,800.

SECTION II

RECOMMENDATIONS

1. Further operation under field conditions is recommended to demonstrate the performance of the device.

2. The economy of operation and rapidity of recovery for thin oil slicks deserves further demonstration on a larger scale.

3. The core of the present prototype was designed for adaption to field testing. Therefore, it is recommended that a catamaran be employed in the first field testing of the device as depicted in Figure 21.

4. The scale of testing should be such to reflect the operation of such a device to handle chronic oil spills in such waterways as the Cuyahoga River, Houston ship channel, the Buffalo River, etc.

SECTION III

INTRODUCTION

This report summarizes the program entitled "Air Modulated Vacuum Oil Recovery - Collection of Spilled Oil with the Aid of Foams", Program Number 18050EHP supported jointly by the Environmental Protection Agency and the City of Cleveland and was conducted by Horizons Incorporated. The experimental laboratory phase of the program was from October 19, 1969 to March 30, 1970. The design, construction and testing phase was from June 18, 1970 to October 30, 1970.

The problem of oil spills is one which has been reviewed and considered from many aspects. The objective of this program was the development of a device to collect spilled oil from the surface of water. The device embodied, as a main principle, the trapping of the oil in a foam produced by air agitation and a foaming agent, along with vacuum collection of the foam and its breakdown to liquid oil. The device was designed, constructed and tested in the form of a working model in the second phase of the program. The results of the tests on the model device show it to be an unqualified success in providing a rapid method of recovering thin oil slicks from water surfaces and extending the range of application of the vacuum suction technique. It further offers the potential of working in sea state conditions with similar success due to the versatility of its design and the counteraction of the main problem of straight vacuum suction techniques under similar conditions. These considerations will be discussed in greater detail later.

Various sources (1, 2, 3, 4, 5, 6) indicate that vacuum suction devices plus containment offer advantages in low cost of recovery operations and potentially rapid recovery rates. However, a disadvantage of straight vacuum suction is the lower limit of slick thickness (approximately 1/2 inch) which can be efficiently collected. Below this thickness straight vacuum suction draws great quantities of water into the collection tank. The value of the Air Modulated Vacuum Oil Recovery (AMVOR) technique is that it surpasses this limitation in removing oil and attains nearly quantitative oil removal as a practical possibility.

The Horizons' Air Modulated Vacuum Oil Recovery (AMVOR) System involves the trapping of the oil in a foam followed by vacuum collection of the oil rich foam. Foaming aids are employed, when needed, to enhance the conditions of injection of fine diameter bubbles across the oil/water interface. The stability of the foam generated is also enhanced

by such agents. A suitable foam stability is needed to permit gravity separation of the water from the oil foam. The AMVOR technique has a broad range of application and can be employed to treat emulsions of oil in water, also. This is borne out by reference to studies of air flotation as a method of treating hydrocarbon refinery wastes (7, 8, 9) and noting that air scrubbing of such an emulsion condition can produce a froth which is removable by vacuum techniques.

The experimental phase (Phase I) of the program involved a demonstration of the feasibility of the approach and the acquisition of data useful to the design phase (Phase II) of the program. The experimental phase included an investigation of (a) foaming aids, (b) air dispersing techniques, (c) oil foam collection, and (d) oil foam breaking.

The engineering phase (Phase II) involved engineering, construction and testing the design of the model device. The model embodies the main elements of a field scale device and is seen to be readily adaptable to field operations as a result of its successful tests. To permit remote field operations with minimum hazard and cost, compressed air power was selected as the unified power source. Compressed air provided the motive air for vacuum generation, for pump motor power, for actuator control elements, and for oil foam generation. The system was divided into natural subelements (or assemblies) selected for ease of maintenance and to permit future remote operation. The total device was designed to fail safe, to have reserve elements for additional control of the system and to permit auto-operation of the system with minor attention from an operator.

The completed device was tested in a 7,000 gal test tank with a depth of four feet with thin tramp oil slick (<4 mm thick). Such thin slicks are common on the Cuyahoga River, for example, and additionally provide a stringent test for the system. If such thin slicks can be recovered rapidly from the described test tank, obviously thicker slicks can be recovered much more rapidly. The results of the tests demonstrate recovery rates of 450 gal/hr.

SECTION IV

EXPERIMENTAL - PHASE I

The laboratory phase of this program included the following considerations:

1. Foaming Agents Investigation
2. Air Dispersing Techniques
3. Foam Collection
4. Foam Destruction

All of the above considerations were examined. The focus of attention was primarily on the foaming agents and the air dispersing technique. Several methods and conditions of air dispersion were examined. Vacuum pickup of the oil on the bench scale was not a problem and leads to a high degree of foam destruction. The application of heat was also useful in foam destruction. Bibuluous materials were useful in collapse of the oil foam, however, under the experimental conditions the vacuum collapse was more efficient.

It was our goal to produce highly expanded stable foams containing minimum quantities of water, while utilizing low concentrations of nontoxic biodegradable surfactants.

The initial criteria used for the basis of selection of selection of surfactants are outlined as follows:

Initial Surfactant Criteria

1. Oil Solubility
2. Foaming Capability at Low Concentrations in Oil
   a. Good expansion factor (ratio of foam volume to contained liquid)
   b. Good foam stability (long collapse time in undisturbed condition)
3. Effective at Low Surfactant Concentrations in Aqueous Environment
4. Non-enhancement of Oil Emulsion Formation
5. Nontoxic (or low toxicity)
6. Biodegradable

Using these criteria we selected for laboratory study commercially available surfactants which are used in various food products and the petroleum industry. Also, materials used in the dispersion treatment of oil slicks were examined with respect to their foaming properties at low concentrations.

Table 1 lists the type and name of the surfactants examined in the preliminary laboratory evaluation. The laboratory study consisted of a determination of the expansion height achieved by low concentrations of surfactant in oil over water. The sample was subjected to aeration by a given volume of air at a standardized pressure and flow rate through a porous disc below the oil/water interface. The time required for the collapse of the foam to the initial state was also determined in this confined container. Timing of the collapse time was limited to a 3 minute maximum to permit a rapid survey of surfactants. Figure 1 illustrates the foaming evaluation apparatus. Tests were conducted on Heavy Sweet Louisiana Crude. Table 2 summarizes the tests of aeration on the oils and oil/water system.

TABLE 1

Surfactant Types

1. Soybean Phosphatides
   "Lecithins"
2. Sorbitan Fatty Acid Esters
   Arlacel 20 (Sorbitan Monolaurate)
   Arlacel 80 (Sorbitan Monooleate)
3. Polyoxyethylene Sorbitan Fatty Acid Esters
   Tween 60 (Polyoxyethylene (20) Sorbitan Monostearate)
4. Polyoxyethylene Sorbitol Esters
5. Polyoxyethylene Alcohols
   Brij 58 (Polyoxyethylene (20) Cetyl Ether)
6. Tergitol Nonionics
   Nonyl Phenyl Ethyleneoxide
   Nonionic NP-14
7. Rosin Derivatives
8. Commercial Materials for Oil Spill Treatment

Gamlen	Tyaflo
Slix	OSD
Spillaway	Magnus

9. Aliphatic Alcohols

n-amyl alcohol	isopropyl alcohol
4-methyl 2 pentan-ol	methyl alcohol

ethyl alcohol

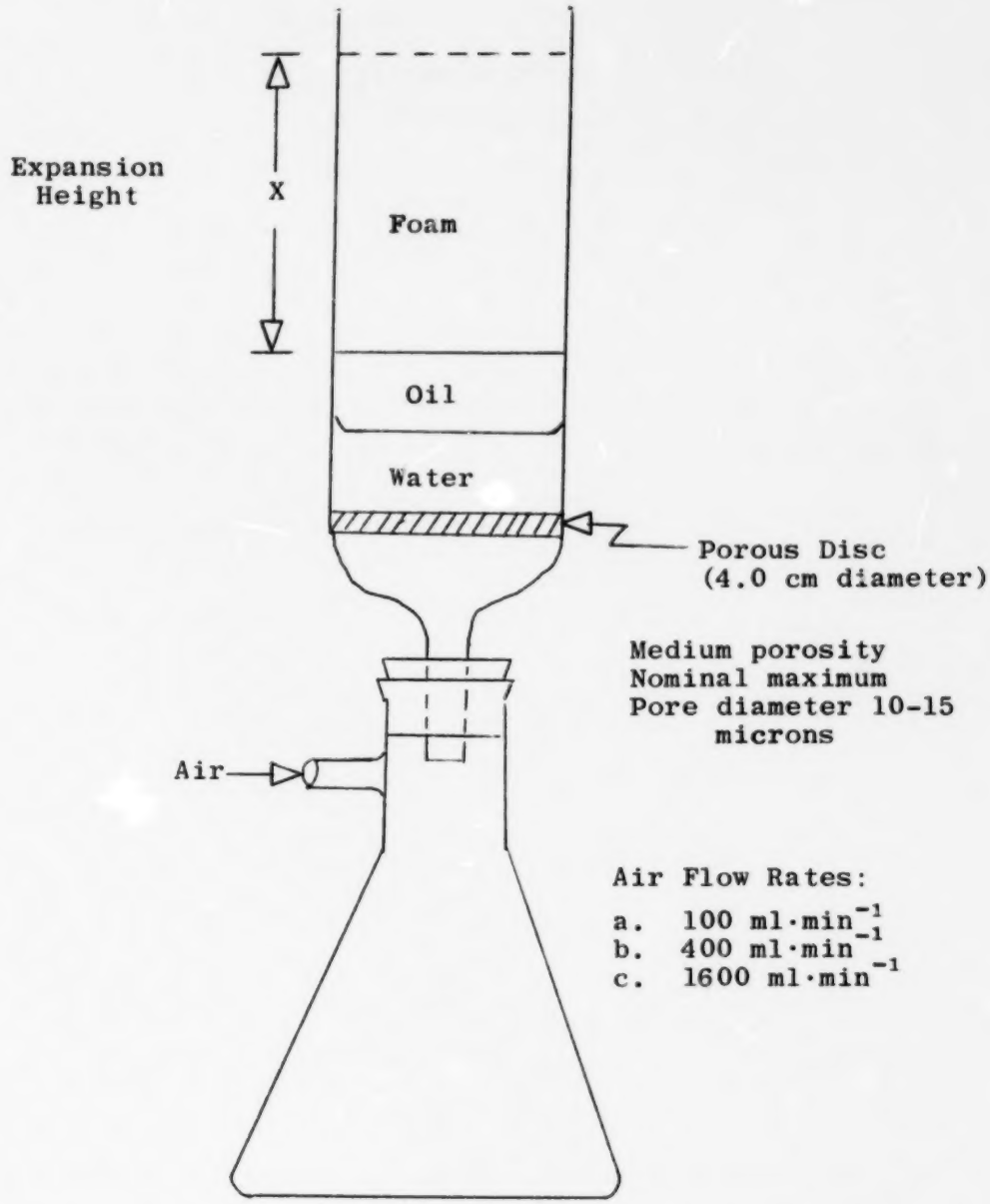

FIGURE 1

Bench Scale Test Apparatus

TABLE 2a

Foam Stability Tests on Oils

Height Rise, X_n

Collapse Time, t_n

n = flow units of air
1 = 100 $ml \cdot min^{-1}$
2 = 400 $ml \cdot min^{-1}$
5 = 1600 $ml \cdot min^{-1}$

	X_1 (cm)	t_1 (sec)	X_2 (cm)	t_2 (sec)	X_5 (cm)	t_5 (sec)
Canadian Crude (CC)	4	26	8	31	12.5	32
Illinois Basin (IB)	5.5	60	10	62	11.0	60
Heavy Louisiana Crude (HLC)	6.5	45	9.0	59	10.0	60
Sw. Louisiana Crude (SLC)	5.0	50	8.0	60	9.5	60

Foam Stability Tests on Oil + Water

Sw. Louisiana Crude	no foam		7.0	90	7.5	50
Illinois Basin	froth (~1/2 cm)		froth		*15.0	32
Canadian Crude	froth		froth		*11.0	25

* Foaming occurs when oil comes in contact with air injector.

TABLE 2b

Foam Stability Tests on Heavy Louisiana Crude

Surfactant Conc. %	X_1 (cm)	t_1 (sec)	X_2 (cm)	t_2 (sec)	X_5 (cm)	t_5 (sec)
PE 40						
.25	6.0	42	7.0	50	8.0	57
.50	7.0	40	7.5	50	8.0	60
1.0	7.0	45	7.5	50	8.5	56
P 400 Polypropylene Glycol						
.25	7.5	76	7.5	75	7.5	70
.50	6.0	70	7.0	70	8.0	72
1.0	7.0	60	7.5	70	8.0	70
N-amyl Alcohol						
.25	6.5	42	6.5	48	8.0	58
.50	6.0	48	7.5	58	8.5	60
1.0	6.0	43	7.0	60	8.0	58
Slix						
.25	7.0	50	7.5	60	8.0	70
.50	7.0	48	7.0	48	8.5	70
1.0	7.0	55	7.0	60	7.5	70
Spillaway						
.25	7.5	79	7.0	60	7.5	65
.50	7.5	60	7.5	60	8.5	68
1.0	6.5	40	7.0	50	7.0	40
EHEC (low)						
.25	8.0	49	7.5	50	8.0	50
.50	8.0	46	7.0	48	7.0	59
1.0	6.0	45	7.0	60	8.0	60

TABLE 2c

Foam Stability Tests on
Louisiana Crude Oil + Surfactants

	X_1 (cm)	t_1 (sec)	X_2 (cm)	t_2 (sec)	X_5 (cm)	t_5 (sec)
Heavy Louisiana Crude	6.5	45	9.0	59	10.1	60
Surfactant Conc. %						
Aerosol 18	incompletely dissolved in oil					
.25	6.0	45	6.5	45	6.0	40
.50	9.5	60	8.5	50	8.0	45
1.0	11.0	60	10.5	50	9.0	50
Arlacel 20 (Sorbitan Monolaurate)						
.25	7.5	180^+*	8.0	180^+	8.0	180^+
.50	8.5	180^+	8.5	180^+	7.0	180^+
1.0	7.0	180^+	7.5	180^+	8.0	180^+
Arlacel 60						
.25	4.5	28	5.5	35	6.5	40
.50	5.0	35	6.5	40	6.5	45
1.0	4.0	22	5.0	35	6.0	45
OSD						
.25	3.5	25	7.5	50	8.5	60
.50	5.0	35	8.5	43	9.5	60
1.0	5.0	50	9.5	50	9.5	60
Hyonic JN-400-SA						
.25	4.0	30	5.0	30	6.0	30
.50	4.0	30	4.5	30	5.5	30
1.0	5.0	60	6.0	60	6.5	30
PE 225						
.25	7.5	45	7.5	45	8.0	50
.50	7.5	75	7.5	45	8.0	65
1.0	8.0	54	7.0	51	7.5	55

*Three minutes was the limit used in timing the collapse time.

TABLE 2d

Foam Stability Tests on Louisiana Crude + Surfactants + Water. 25 ml Oil + Surfactant = 25 ml Water

Surfactant Conc. %	X_1 (cm)	t_1 (sec)	X_2 (cm)	t_2 (sec)	X_5 (cm)	t_5 (sec)
Arlacel 20 (Sorbitan Monolaurate)						
1.0	no foam water dispersed into oil 25-50%		dispersion 100%		dispersion	
Spillaway						
.25	no foam		no foam		7.0	50
.50	no foam		little foam		7.0	40
1.0	oil in large globules air/water globules moving around				small globules some foam	
Tergitol NP14 (Nonionic)(Nonyl Phenyl Polyethylene Glycol Ether)						
1.0	no foam dispersion formed/separated but water cloudy		no foam		7.5	123
Arlacel 80 (Sorbitan Monooleate)						
1.0	no foam		6.0 some foam remaining	240^+	7.0	60^+
Brij 98 (Polyoxyethylene (20) Oleyl Ether)						
1.0	slight foam broke system into small globules		7.5	60	9.0	180
EHEC (low)(Ethyl Hydroxy Ethyl Cellulose)						
.25	no foam		no foam		8.0	64
.50	no foam		6.0	55	7.0	65
1.0	no foam		9.0	43	7.5	60
Slix						
.25	no foam		no foam		9.0	76
.50	no foam		9.0	45	9.0	75
1.0	no foam		-	-	dispersion stable after foam collapse	

TABLE 2d (continued)

Surfactant Conc. %	X_1 (cm)	t_1 (sec)	X_2 (cm)	t_2 (sec)	X_5 (cm)	t_5 (sec)
N-amyl Alcohol						
.25	froth on surface		6.5	19	12.0	50
.50	6.0	16	7.5	37	9.0	57
1.0	6.0	10	6.5	22	9.0	50
injection of air bubbles occurred through the oil/water interface						
Polypropylene Glycol P400						
.25	froth	froth	6.0	20	6.5	45
.50	froth	froth	6.5	20	10.0	44
1.0	froth	froth	6.5	25	11.0	39
Hyonic P40						
.25	no foam		9.0	64	9.5	150
.50	no foam		8.0	55	9.5	169
1.0	no foam		9.0	55	9.0	132
			dispersion foams			
Hyonic P225						
.25	5.0	14	6.0	27	8.5	72
.50	froth		froth		8.0	120
1.0	6.0	20	8.0	61	8.0	70
			foam above dispersion			
Hyonic JN-400SA						
.25	7.0	67	12.5	90^+	14.0	90 water foam
.50	6.0	34	11.0	90^+		
1.0	7.0	60	15.0	180		

A large number of surfactants have been examined at several concentrations (0.25, 0.5 and 1.0 weight percent surfactant/oil) at various aeration rates. The most promising materials were studied further at lower concentrations (0.1, 0.01, and 0.001 weight percent) to determine variations of effectiveness. These experiments are summarized in Table III. The surfactants were selected for further study at lower concentrations based on the following considerations of the foams they produced:

1. The collapse times of the foams were in excess of 90 seconds.

or 2. The foams were formed in the aqueous system and the surfactant did not produce excessively stable oil/water dispersions and the foams were more stable than the dispersions.

or 3. The foams tended to be rich in oil or had other interesting properties.

TABLE 3

Effect of Surfactant Concentration on Foam Properties

Surfactant Conc. %	X_1 (cm)	t_1 (sec)	X_2 (cm)	t_2 (sec)	X_5 (cm)	t_5 (sec)
Brij 30						
1.0	21.0	300^+	23.0	180^+	25.0	240^+
.5	5.5	180	20.0	180	20.0	180
.25	no foam		6.0	20	19.0	180
.1	no foam		8.0	32	9.5	55
.01	no foam		no foam		8.0	20
.001	no foam		no foam		9.5	51
Brij 76						
1.0	16.0	180^+	31.0	180^+	45-25	180^+
.5	5.0	30	10.0	180	11.0	180^+
.25	7.0	20	13.0	112	12.0	180^+
.1	8.5	56	11.0	90	9.0	126
.01	5.0	froth	6.5	17	7.5	27
.001	no foam		no foam		10.0	50
Brij 96						
1.0	12.5	180^+	25.0	180^+	too high (>25 cm)	
.5	10.0	180^+	25.0	180^+	to measure in	
.25	8.0	180^+	25.0	180	apparatus	
.1	no foam		10.0	60	9.5	108
.01	no foam		7.0	30	9.5	78
.001	no foam		no foam		7.0	10
G-1086						
1.0	8.0	180^+	22.0	180^+	15.0	180^+
.5	6.0	150	16.0	120	24.0	180^+
.25	8.0	150	15.0	180^+	17.5	180^+
.1	6.0	8	8.5	35	10.0	90
.01	no foam		no foam		7.0	20
.001	no foam		7.5	30	8.0	21

TABLE 3 (continued)

Surfactant Conc. %	X_1 (cm)	t_1 (sec)	X_2 (cm)	t_2 (sec)	X_5 (cm)	t_5 (sec)
G-3634						
1.0	5.5	20	13.0	180^+	too large for large column	180^+
.5	no foam		8.0	54	15.0	90
.25	no foam		5.5	10	7.0	10*
.1	no foam		5.0	froth	8.0	<5
.01	no foam		7.5	24	7.0	16
.001	no foam		6.5	13	10.5	22
N-amyl Alcohol						
1.0	5.0	froth	7.0	22	12.0	16
.5	5.0	froth	froth		8.0	22
.25	5.0	froth	froth		12.0	18
.1	no foam		no foam		11.0	37
.01	no foam		7.0	40	13.0	35
.001	5.0	froth	5.0	froth	12.5	35
Tyfosol 80 (Amine-Amido Sulphonates and Alkanolamide Type Surface Active Detergents)						
1.0	12.0	180^+	22.0^+	180^+	exceeded column volume	
.5	9.0	180^+	12.0	180^+	17.0	180^+
.25	6.0	180^+	9.0	180^+	14.0	180^+
.1	no foam		5.0	froth	8.0	17**
.01	no foam		5.0	froth	7.5	13**
.001	5.0	froth	7.0	21	9.5	23
Klucel E (Hydroxylpropyl Cellulose)						
1.0	5.0	froth	8.0	37^+ froth	14.0	61
.5	7.5	24	11.0	51	16.0	41
.25	5.5	24	10.0	74	15.0	62
.1	5.0	froth	6.5	9	15.0	37
.01	no foam		7.0	13	10.0	29
.001	no foam		no foam		water froth	

Froth: formation of a foam layer less than .1 cm in height. At low extremes the foam does not completely cover the oil surface.

* dropped to 5 cm and held.

** stable froth.

The low concentrations of surfactant produced less foam than the 0.25 weight percent solutions and required higher air flow rates to generate foam.

Studies were also initiated on the method of aeration; namely, the effect of variation in the separation distance between aerator surface and oil-water interface. Figure 2 illustrates the experimental apparatus used in this study. There appears to be an optimum distance required for maximum foam generation which is dependent upon the flow rate. Thus, it appears that low air flow rates require a closer approach of aerator to interface while higher air flow rates have optimum distances further away from the interface as illustrated by the results of Table 4.

TABLE 4

Examination of Effect of Oil/Water Interface to Aerator Separation on Foaming Properties

Interface-Aerator Separation Distance (cm)	Aerator Flow Rates					
	1 Unit		2 Units		5 Units	
Y	Foam Height Rise X_1 (cm)	Collapse Time t_1 (sec)	X_2 (cm)	t_2 (sec)	X_5 (cm)	t_5 (sec)
5.5	2.0	30	4.0	45	9.0	80
4.0	2.0	30	4.0	48	12.5	90
3.0	2.5	60	6.0	85	11.0	85
2.0	3.5	75	4.0	59	5.5	58

Using this apparatus, a series of experiments was conducted which investigated the removal of the oil foam by suction and collected data which evaluated the water content of the foam in a series of three foaming/suction steps for a given quantity of oil. In these experiments, three liters of water were placed in the column depicted in Figure 3.

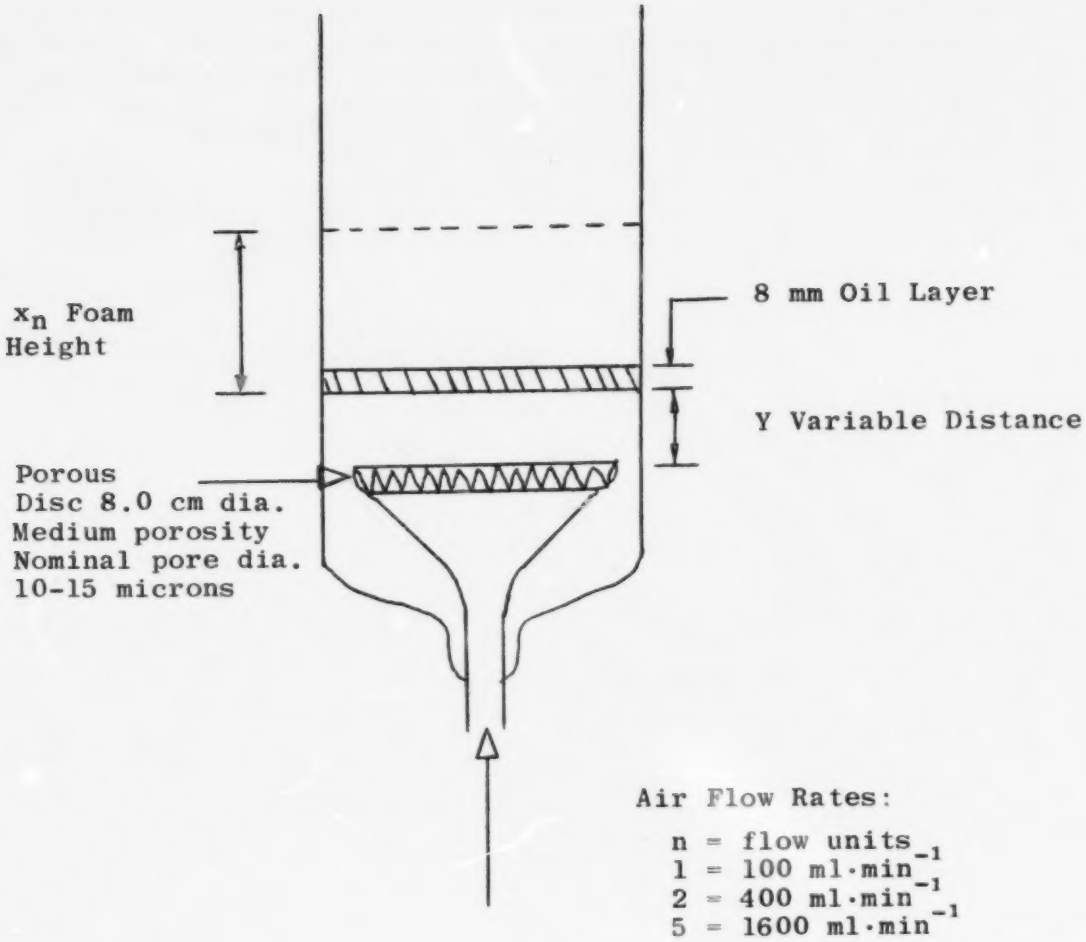

FIGURE 2

Apparatus for Examination of Oil/Water-to-Aerator. Separation Distance, Y

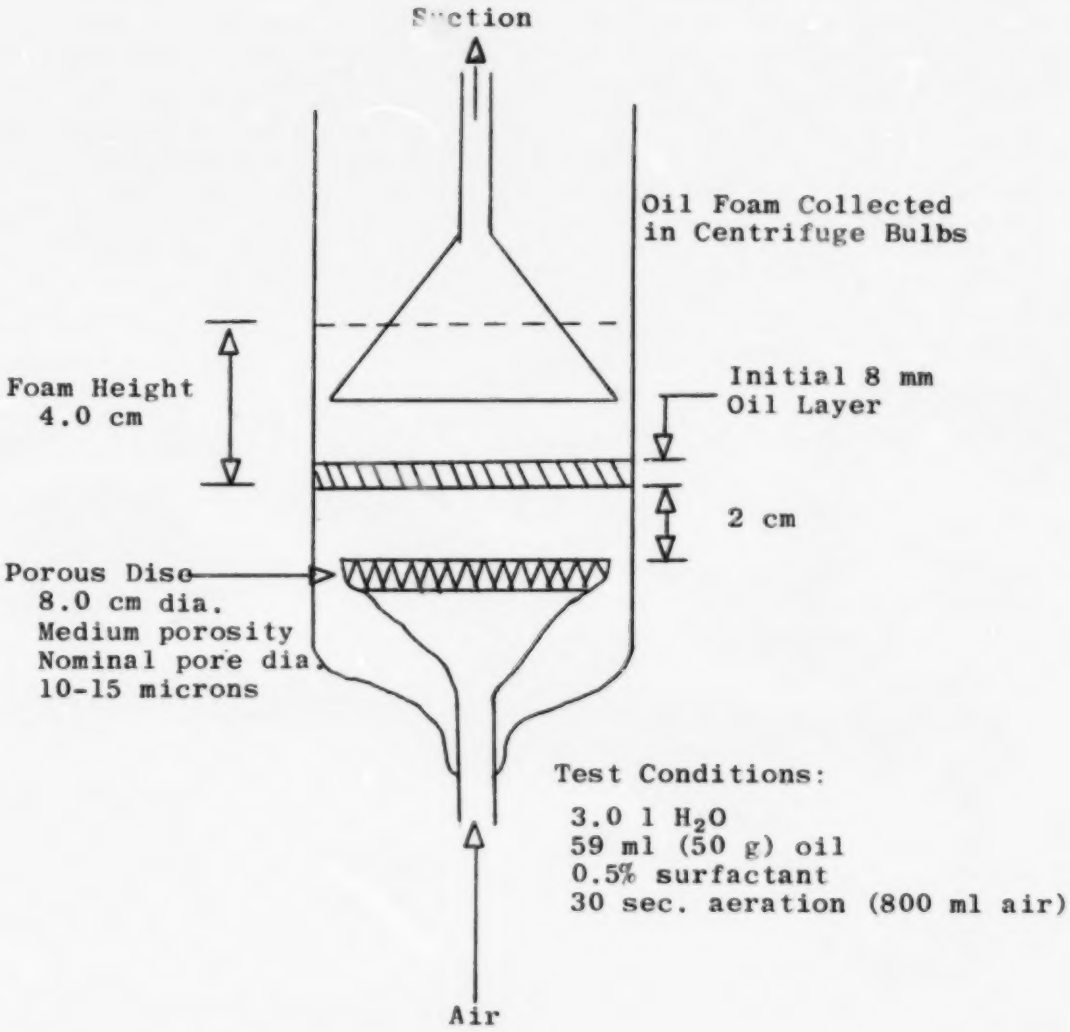

FIGURE 3

Apparatus for Evaluation of Oil/Water Content of Foams

The aerator was placed 2 cm below the interface of oil/water. Fifty grams of oil containing 0.5% surfactant were placed in the column (oil layer 9 mm thick) and exposed to 800 ml air over a foaming period of 30 seconds. The foam rose to a height of 4.0 cm and was collected (after aeration was stopped) by means of an inverted funnel. The sample was collected in a centrifuge tube; the collection system was rinsed with 25 ml of benzene and a determination of water content was made according to ASTM D96-52T. From the results shown in Table 5, one can see in the first aeration (30 seconds) followed by suction that one can routinely collect more than 40% of the oil in the slick over the aerator and as much as 78% on the first cycle. Also, it is apparent that after only three such aeration-suction cycles more than 85% of the oil can be recovered.

TABLE 5

Oil/Water Content of Foams $\frac{\text{ml Oil}}{\text{ml Water}} \frac{(\text{\% Total Oil})}{(\text{\% Water in Sample})}$

Original Sample of Oil = 59 ml

Test						
I	29.1 ml / 0.9 ml	(49.3%) / (3%)	7.0 / 3.0	(11.9%) / (30%)	20 / 30	(34%) / (60%)
II	29.3 ml / 0.75	(49.6%) / (2.3%)	19.0 / 1.0	(32.2%) / (5%)	3.5 / 1.5	(5.9%) / (30%)
III	29.2 ml / .85	(49.5%) / (2.8%)	12.3 / .7	(20.9%) / (5.4%)	9.0 / 1.0	(15%) / (10%)
IV	24.3 ml / .7	(41%) / (2.8%)	8.5 / 1.5	(14%) / (15%)	13.7 / 1.3	(23.2%) / (8.7%)
V	46.1 ml / .9	(78%) / (1.8%)	8.5 / 1.5	(14%) / (15%)	5.0 / 5.0	(8.5%) / (50%)
Average Percentages	53.4% total oil / 2.6% water content			18.6% / 14.1%		17.3% / 31.7%

89.3% average percentage of total oil recovered.

A number of large bench scale experiments were conducted in which slicks of 8 mm thickness were removed from the water surface. Such experiments examined the conditions of removal with various surfactants, determined the rate of oil recovery with various surfactants, and analyzed the oil recovered for water content.

The experimental apparatus employed in this series of experiments is depicted in the drawing of Figure 4. Here the main components of porous disc aerator, suction head, oil drain line, vacuum line, and oil reservoir are represented. The next series of four photographs, Figures 5 through 8, respectively, depict (a) initial conditions, (b) experimental operation, (c) a close-up of oil foam generation and collection, and (d) the surface of water at the conclusion of the experiment.

It must be pointed out that the suction head is always maintained in a position well above the oil/water interface and that the generated oil foam rises into the suction head. Thus, the oil foam is drawn into the oil drain line with very little water. The very low water content of the recovered oil in the first fractions is extremely important since this offers the potential of recovering valuable oil material in a highly efficient manner and possibly without further extensive treatment.

This is borne out by examination of several tables of data (Tables 6 through 11) obtained by analysis of the various recovered oil fractions for water content. Here, one can see that with 8 mm slicks about 60% of the oil can be recovered with less than 0.5% by volume water. Conceivably, if one is able to maintain the slick thickness at better than 4 mm (~0.16 in.) thickness this recovery condition may be maintained for the bulk of recovery operations. Other straight vacuum skimming techniques require oil slick thicknesses four times as great to be less effective (1, 2). Similarly, examination of Table 11 where thicker slicks (16 mm or ~.63 in.) were studied shows nearly 99% of the oil recovered with less than 5% (by volume) water content.

Table 12 presents the estimated analysis on a tramp oil (Bunker C type) recovered from the Cuyahoga River which was treated by the AMVOR apparatus in our laboratory. This illustrates the range of application of the technique to high viscosity oils.

Additional testing of the system concept in a larger laboratory scale involved employing the same sparging and recovery elements (described in bench scale experiments) now in conjunction with a large tank and larger vacuum oil recovery lines.

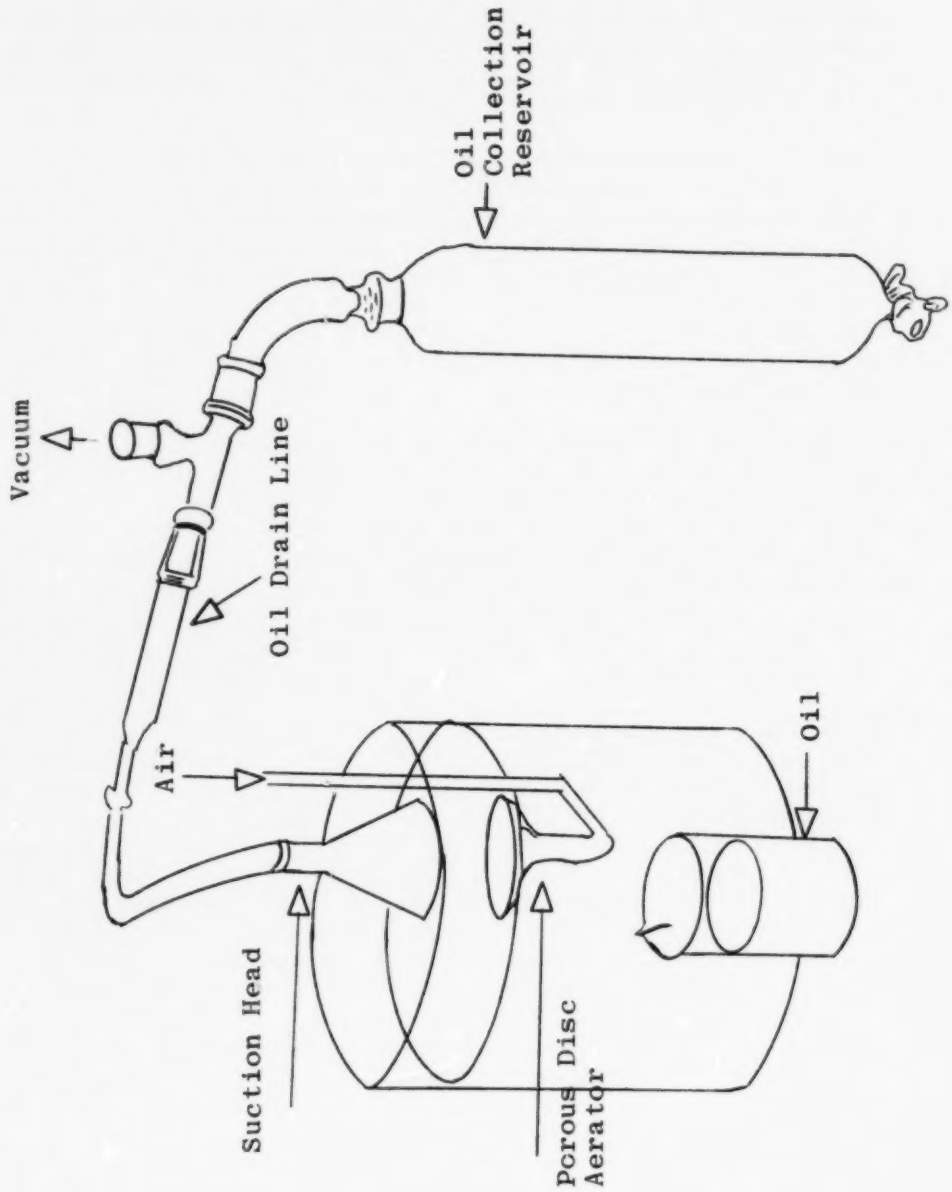

FIGURE 4

Drawing of Oil Foam Collection Apparatus (Air Modulated Vacuum Oil Recovery Apparatus)

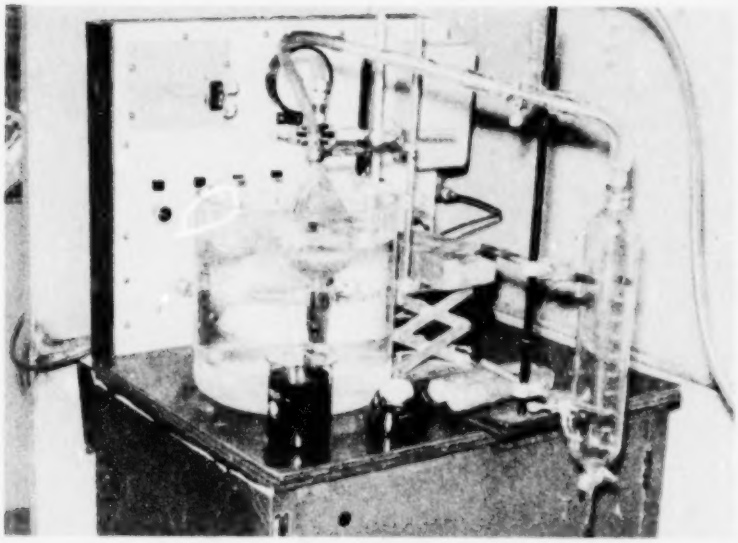

FIGURE 5. Photograph of Bench Scale Apparatus for Horizons' Air Modulated Vacuum Oil Recovery

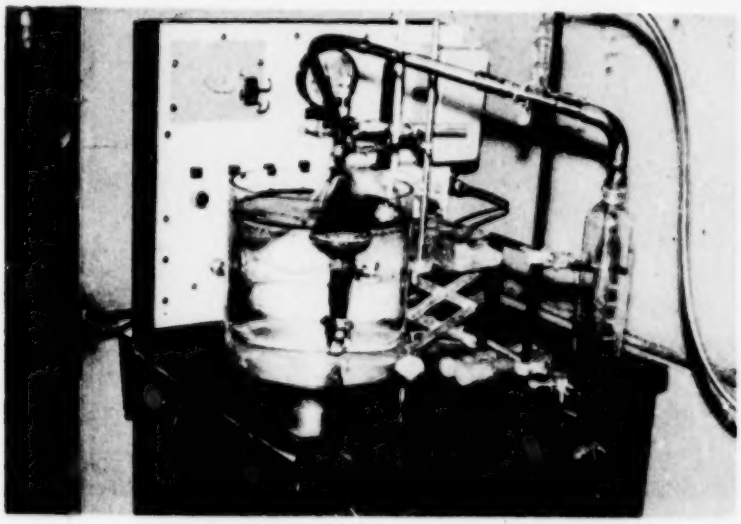

FIGURE 6. Photograph of Apparatus after 1 Min. into Experimental Recovery of an 8 mm Thick Slick of Louisiana Crude Oil

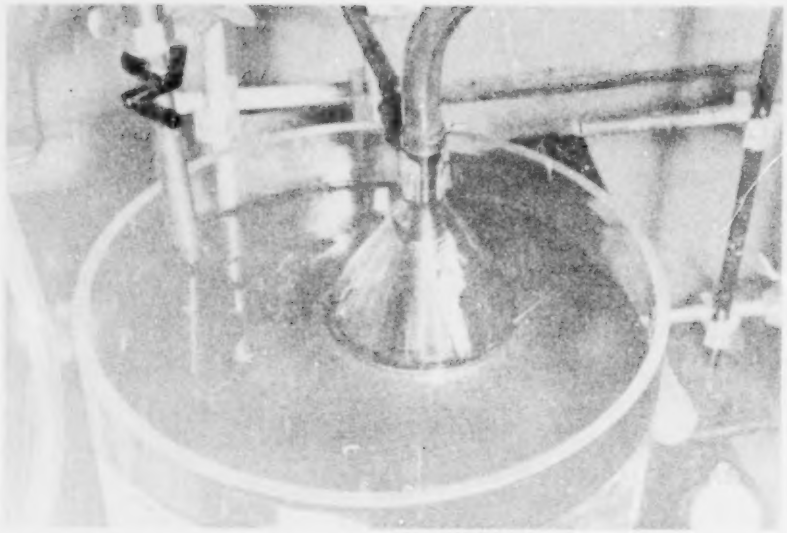

FIGURE 7. Photograph of Foam Generation and Close-Up of Vacuum Recovery Head

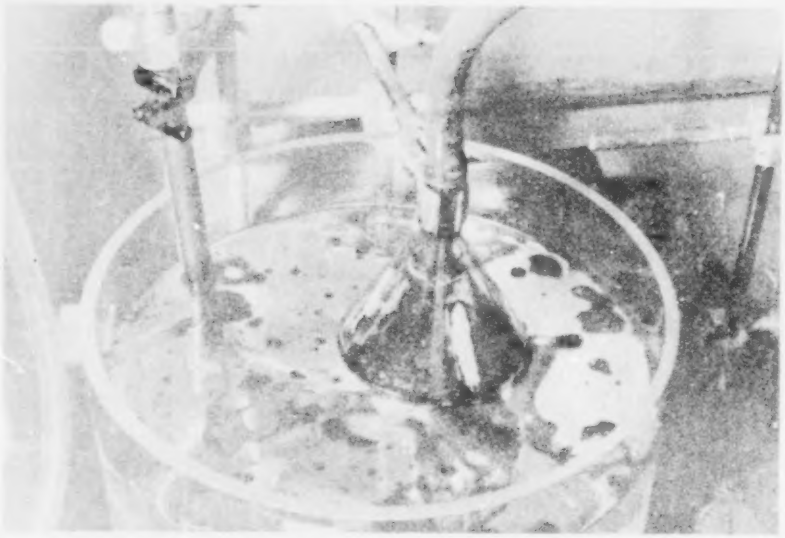

FIGURE 8. Photograph of Tank Surface Illustrating Manner of Oil Removal by Experimental Apparatus

This experimental apparatus is depicted in Figure 9. Experiments on a 3 gal. oil slick showed that with the larger drain line and the same pumping system, we obtained collection rates of 12 $gal \cdot hr^{-1}$. (Our previous rate was 2 gph.) This permitted an upgrading of our design parameters and indicated that higher efficiency of collection was possible with less costly equipment.

TABLE 6

Oil Removal (1536-18)

8 mm Slick/5 Gal.Tank
(~500 ml Oil)

	Oil Slick Thickness Remaining (mm)	Oil Collected Per Fraction (ml)	% Total Oil Collected	Elapsed Collection Time (min.)	% Water in Fraction
Initial	8	-	-	0	-
Fraction 1	4	318	63.6	5.5	0.3
2	~1	154	94.4	10.0	7.9
3	-	27	99.7	15.4	89.1

Experimental Conditions:

Aerator Porosity	10-15 microns
Air Flow	1.6 l air/min. (32 ml/cm^2-min.)
Line Pressure	5 psi
Bubble Diameter	<.5 mm (mainly ~.2 mm)
Active Area (aerator area)	~8 sq. in.

Heavy Sweet Louisiana Crude Oil
0.5% n-amyl alcohol

TABLE 7

Oil Removal (1536-13)

8 mm slick/5 Gal.Tank
(~500 ml Oil)

	Oil Slick Thickness Remaining (mm)	Oil Collected Per Fraction (ml)	% Total Oil Collected	Elapsed Collection Time (min.)	% Water in Fraction
Initial	8	-	-	0	-
Fraction 1	4-5	258	51.5	7.8	0.0
2	<1	194	90.4	17.3	2.0
3	-	24	95.1	20.7	68.3

Experimental Conditions:

Aerator Porosity	10-15 microns
Air Flow	1.6 l air/min. (32 ml/cm^2-min.)
Line Pressure	5 psi
Bubble Diameter	<.5 mm (mainly ~.2 mm)
Active Area	~8 sq. in.

Heavy Sweet Louisiana Crude Oil
0.5% α -terpineol

TABLE 8

Oil Removal (1536-20)

8 mm Slick/5 Gal. Tank
(~500 ml Oil)

	Oil Slick Thickness Remaining (mm)	Oil Collected Per Fraction (ml)	% Total Oil Collected	Elapsed Collection Time (min.)	% Water in Fraction
Initial	8	-	-	0	-
Fraction 1	4	308	61.7	3.0	0.17
2	<1	158	93.3	6.2	2.2
3	-	18	96.9	9.2	90.4

Experimental Conditions:

Aerator Porosity	10-15 microns
Air Flow	1.6 l air/min. (32 ml/cm^2-min.)
Line Pressure	5 psi
Bubble Diameter	<.5 mm (mainly ~.2 mm)
Active Area	~8 sq. in.

Heavy Sweet Louisiana Crude Oil
0.5% 4-methyl 2-pentan-ol

TABLE 9

Oil Removal (1536-23)

8 mm Slick/5 Gal. Tank
(~500 ml Oil)

	Oil Slick Thickness Remaining (mm)	Oil Collected Per Fraction (ml)	% Total Oil Collected	Elapsed Collection Time (min.)	% Water in Fraction
Initial	8.0	-	-	0	-
Fraction 1	4.5	311	62.3	4.1	0.5
2	1.0	144	91.0	6.3	39.3
3	-	10	92.9	8.7	95.1

Experimental Conditions:

Aerator Porosity	10-15 microns
Air Flow	1.6 l air/min. (32 ml/cm^2-min.)
Line Pressure	5 psi
Bubble Diameter	<.5 mm (mainly ~.2 mm)
Active Area	~8 sq. in.

Heavy Sweet Louisiana Crude Oil
0.2% 4-methyl 2-pentan-ol

TABLE 10

Oil Removal (1536-24)

8 mm Slick/5 Gal. Tank
(~500 mm Oil)

	Oil Slick Thickness Remaining (mm)	Oil Collected Per Fraction (ml)	% Total Oil Collected	Elapsed Collection Time (min.)	% Water in Fraction
Initial	8	-	-	0	-
Fraction 1	4	301	60.3	4.2	0
2	<1	144	89.1	7.45	2.7
3	-	15	92.2	8.85	83.5

Experimental Conditions:

Aerator Porosity	10-15 microns
Air Flow	1.6 l air/min. (32 ml/cm^2-min.)
Line Pressure	5 psi
Bubble Diameter	<.5 mm (mainly ~.2 mm)
Active Area	~8 sq. in.

Heavy Sweet Louisiana Crude Oil
1% 4-methyl 2-pentan-ol

TABLE 11

Oil Removal (1536-41)

16 mm Slick/5 Gal. Tank
(~1000 ml Oil)

	Oil Slick Thickness Remaining (mm)	Oil Collected Per Fraction (ml)	% Total Oil Collected	Elapsed Collection Time (min.)	% Water in Fraction
Initial	16	-	-	0	-
Fraction 1	3	876	87.6	2.5	5.4*
2	1	112	98.8	7.5	2.6
3	-	12	~100.0	10.9	95.2

* This value is partly due to induced "wave action" disturbances in the first part of the experiment and the carry-over of water as a result.

Experimental Conditions:

Aerator Porosity	10-15 microns
Air Flow	1.6 l air/min. (32 ml/cm^2-min.)
Line Pressure	5 psi
Bubble Diameter	<.5 mm (mainly ~.2 mm)
Active Area	~8 sq. in.

Heavy Sweet Louisiana Crude Oil
0.5% n-amyl alcohol

TABLE 12

Oil Removal

8 mm Slick/5 Gal.Tank
(~1000 ml Oil)

	Oil Slick Thickness Remaining (mm)	Oil Collected Per Fraction (ml)	% Total Oil Collected	Elapsed Collection Time (min.)	% Water in Fraction
Initial	16	-	-	0	-
Fraction 1	4	800	80	8.1	4
2	-	150	95	10-12	50

Experimental Conditions:

Aerator Porosity	10-15 microns
Air Flow	1.6 l air/min. (32 ml/cm^2-min.)
Line Pressure	5 psi
Bubble Diameter	<.5 mm (mainly ~.2 mm)
Active Area	~8 sq. in.

Bunker "C" Tramp Oil
0.5% n-amyl alcohol

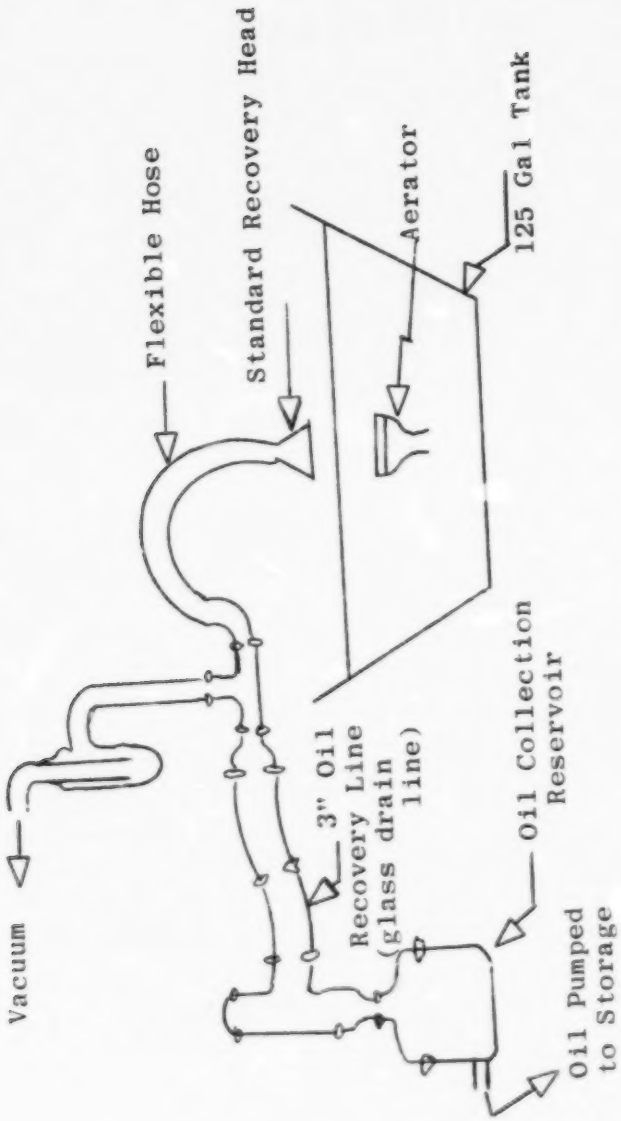

FIGURE 9

Schematic of Large Laboratory Scale Experiment

SECTION V

DESIGN ENGINEERING AND WORKING MODEL CONSTRUCTION PHASE II

The second phase of the program involved the design, engineering, construction, and testing of a working model of the air modulated vacuum oil recovery technique demonstrated in the experimental phase of the program.

The design of the device was guided by several considerations. (a) The model should embody the main elements of a field scale device, (b) it should permit ready transport, portability (by standard conveyances), and (c) should permit remote operation with minor attention of an operator on heavily trafficked rivers, such as the Cuyahoga. With these general factors in mind, the data acquired through the laboratory phase was used to set certain goals for operational conditions of the device. The design data is outlined briefly in Table 13.

TABLE 13

Design Data

Laboratory Apparatus: 5 gal tank/aerator system

8 mm Thick Oil Slick

Air Sparging Rate: 1.6 l/min. (0.057 cfm)

Vacuum Requirements: 17.8 cfm

Oil Recovery Rate: 2 gph

Projected Apparatus: 100 gph oil pickup

Assume an oil foam expansion factor of 10 and collapse time of 1 minute.

Also, assume 4 x foam volume = air volume required.

Air Sparging Rate: 9 cfm

Vacuum Requirements: 890 cfm

Additional Design Elements:

1. Oil Slick Feed System - Hydraulic

2. Recovered Oil Pump System

As an initial consideration, to permit remote field operations with minimum hazard (due to handling liquid fuels such as gasoline) and cost, compressed air power was selected as the unified power source. Compressed air provided the motive air for vacuum generation, for pump motor power, for actuator control elements, for flotation trimming, and for oil foam generation. The system was divided into natural sub-assemblies for ease of construction and sub-assembly testing and debugging. The nucleus of the AMVOR device was constructed first. This is illustrated in Figure 10. It consists of a sparger, a vacuum suction oil foam recovery head, and means to remove water (a 2" diaphragm pump). This sub-assembly was tested and proved out by oil recovery from tank depicted in Figure 10.

A schematic of the entire oil recovery system is presented in Figure 11. Briefly, the system consists of (a) a portable air compressor, powered by LP gas, (b) an air distribution manifold (see Figure 13), (c) a vacuum generation element (see Figure 15), (d) a sparger for foam generating, (e) a level control system (see Figure 14), (f) compressed air driven pumps, (g) a hydrodynamic flow regime system (see Figure 16), (h) an oil transfer pump and storage tanks.

Figure 12 presents a plan view of the device and identifies the several elements of the system. (a) sparger (oil foam generator), (b) vacuum pickup head, (c) actuators for wier control, (d) the flow regime system, (e) central tank level detector, and (f) bridge.

Sparger. The sparger consists of a porous stainless steel disc (10μ mean pore size) mounted at the end of air supply line delivering 5-10 psi air at a rate of ~32 ml min^{-1} cm^{-2}. A filter is employed to remove any particles which might filter out at the sparger. The sparger is mounted in a manner to permit adjustment of its position relative to the interface oil oil and water.

Vacuum Recovery Head. The vacuum recovery head is constructed of a special design to provide a venturi action among a nested set of funnels with helical ribs to promote rapid lifting of oil foam. The vacuum recovery occurs with a rapid breakdown of the oil foam. The recovery head is mounted on a rack and pinion to permit easy adjustment of the recovery head above the oil surface (see Figure 12). The vacuum generator is illustrated in Figure 15.

Actuated Wier Control. A circular wier is employed around the central tank to permit adjustment of the oil flow into the control tank. The wier is adjusted vertically with respect to the bridge surface to allow a matching of the

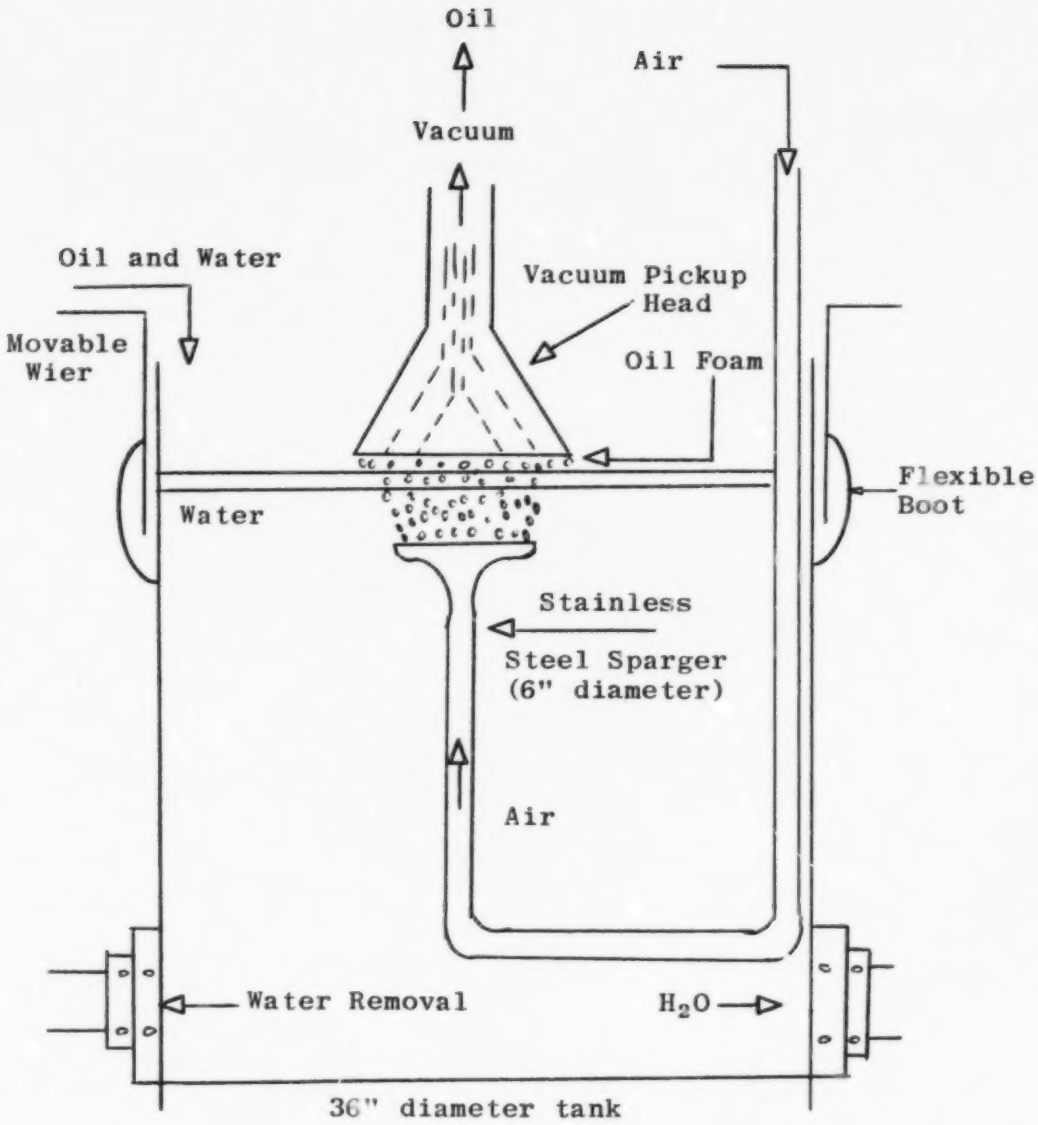

FIGURE 10

Nucleus of Air Modulated Vacuum Oil Recovery

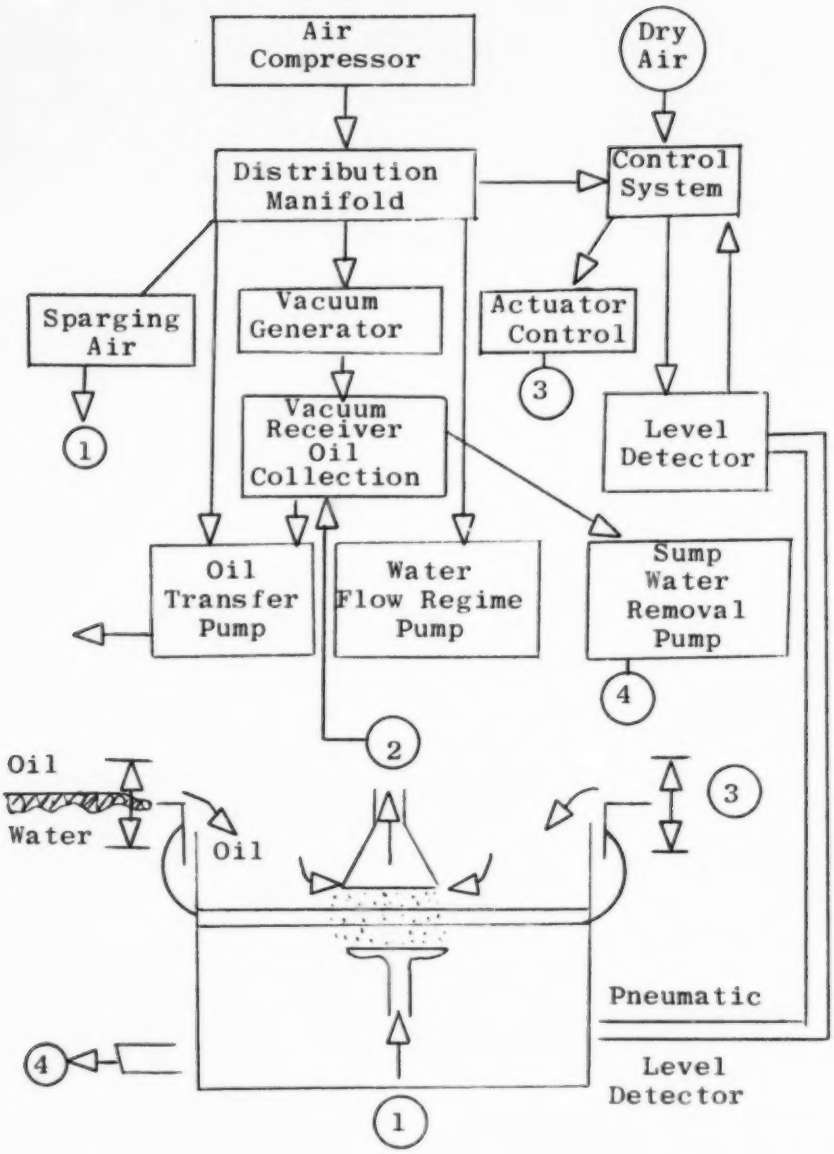

FIGURE 11

Schematic of AMVOR Device and System Elements

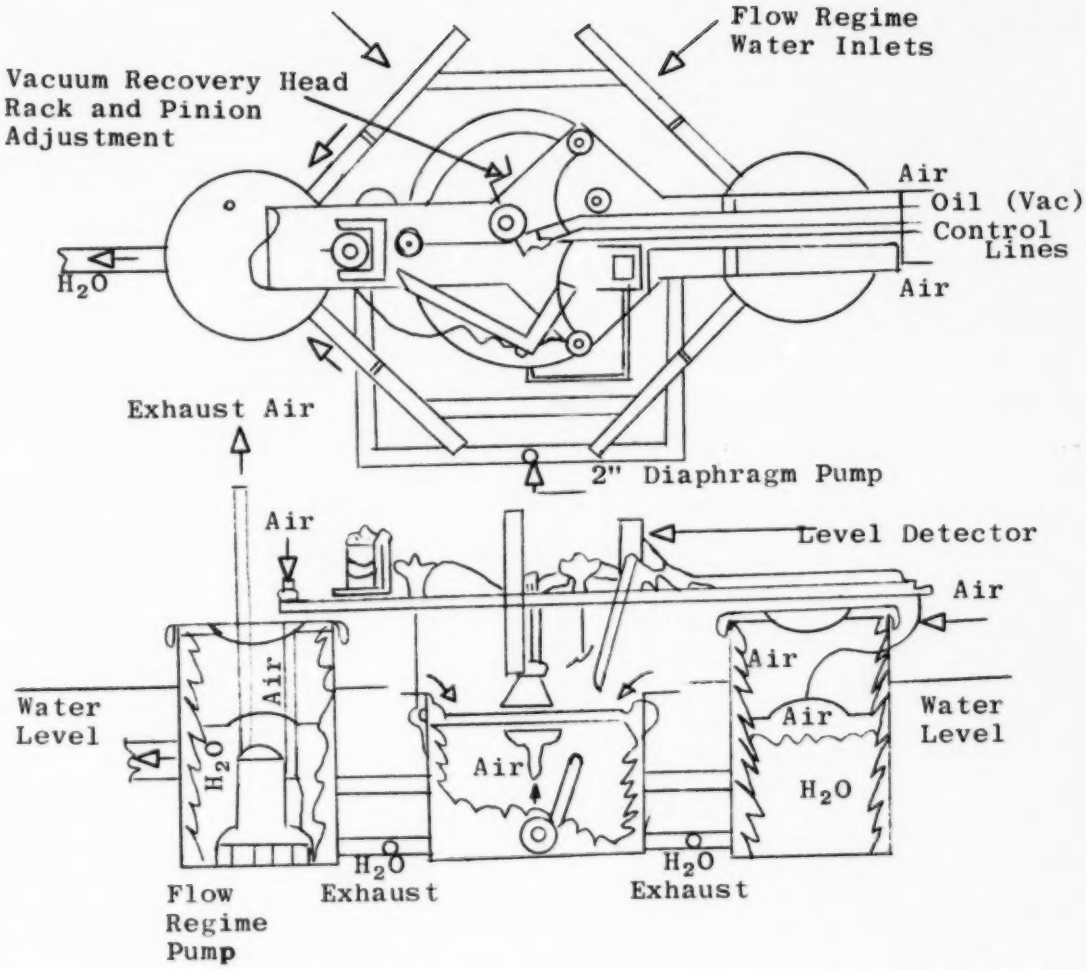

FIGURE 12

Plan View of AMVOR Device

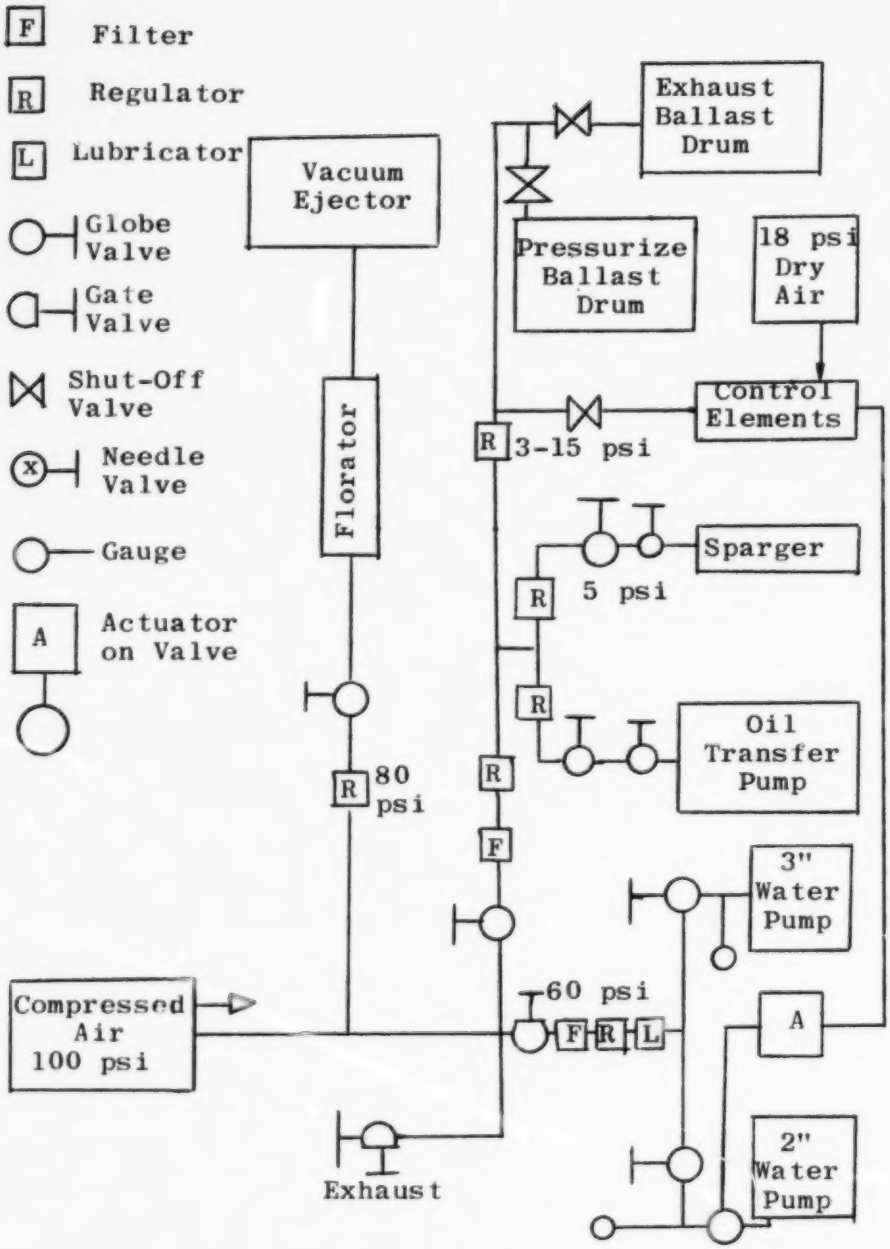

FIGURE 13

Schematic Diagram of Air Distribution Manifold

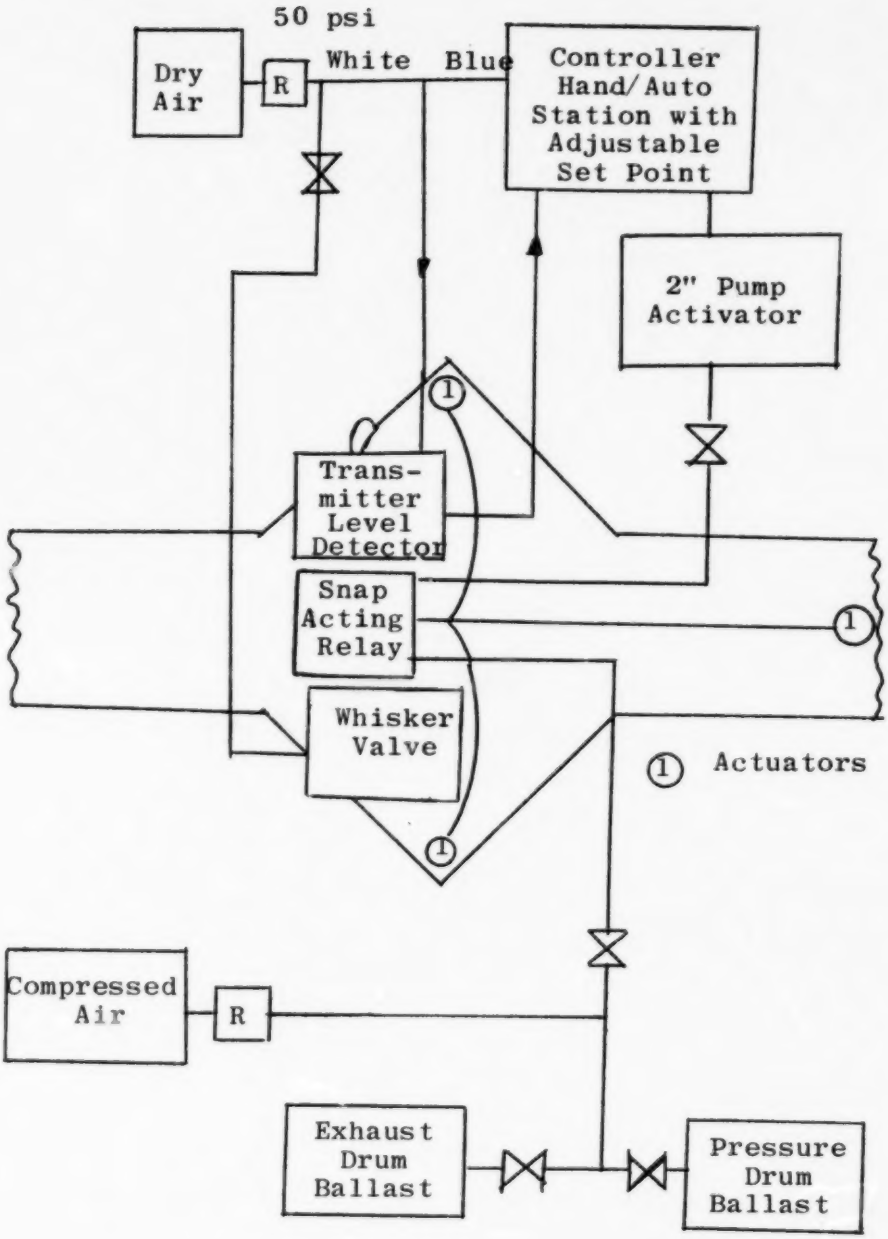

FIGURE 14

Schematic Diagram of System Control Elements

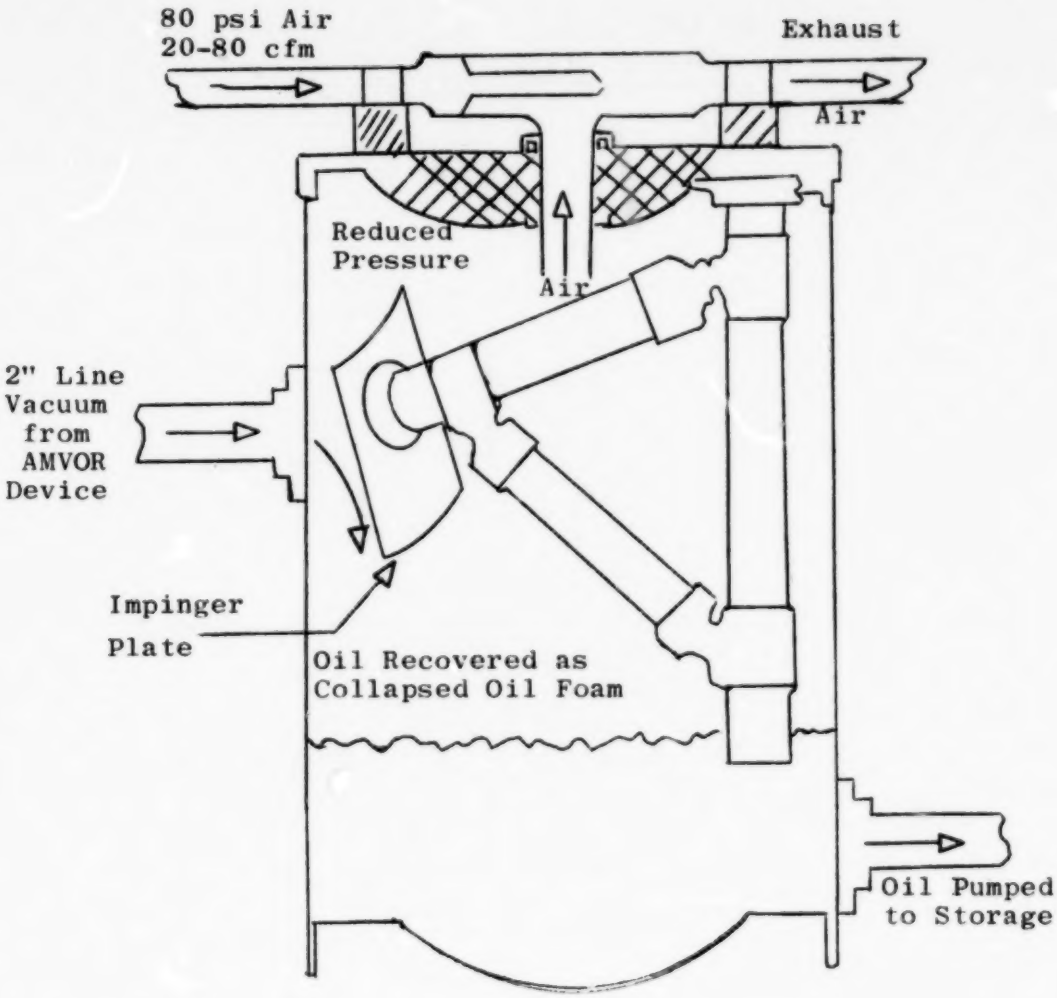

FIGURE 15

Plan View of Accessory Element. Vacuum Reservoir and Air Ejector

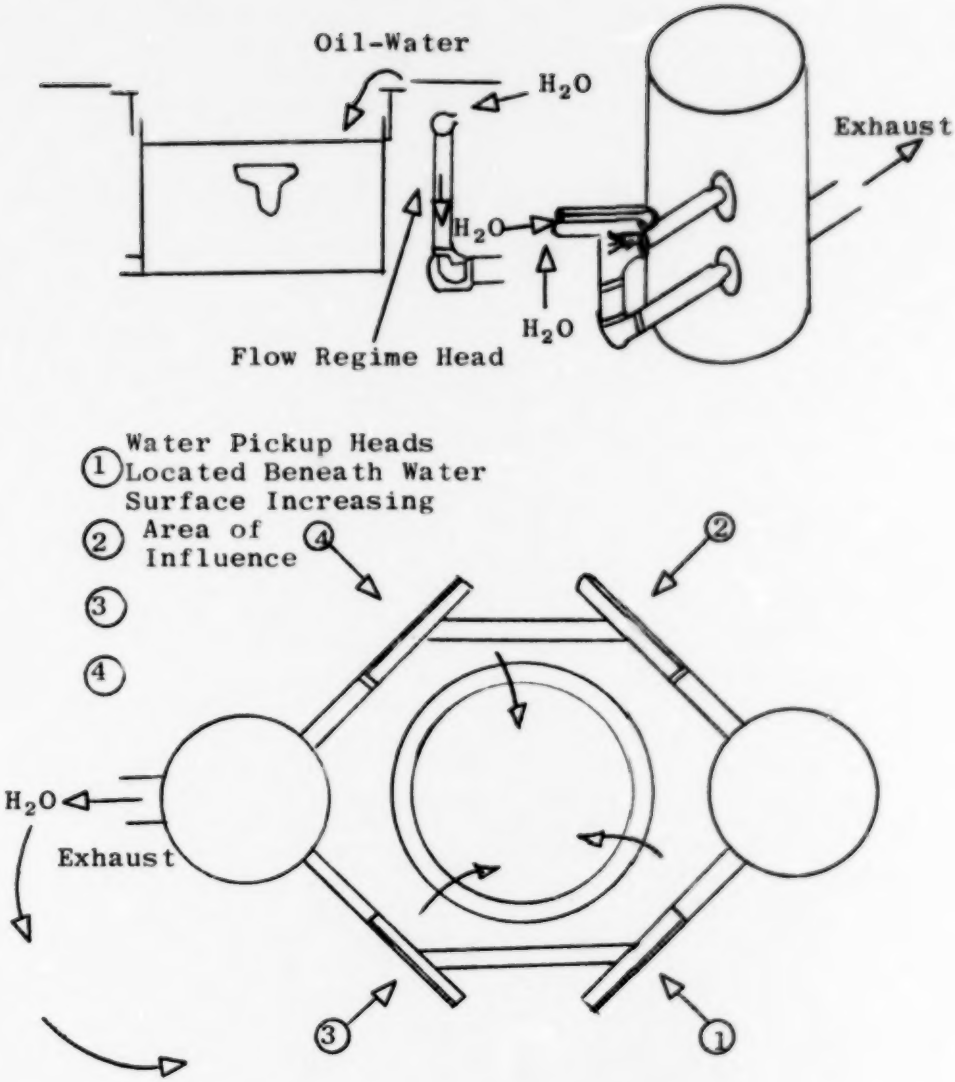

FIGURE 16

Flow Regime Pattern in Device Vicinity

oil/water inflow with the water pumped from the bottom of the tank and the oil foam removal. The central tank also provides a relatively quiet area for the foaming and vacuum recovery. The wier permits a controlled concentration of the oil from the outside surface. The difference in water levels in central tank and water surface provides a gradient for oil movement to take place. This gradient is further enhanced by the action of a flow gradient in a hydrodynamic flow regime.

The Flow Regime System. The flow regime system consists of a large capacity pump placed in one of the stabilizing tanks adjacent to the central tank. The piping of the pickup heads is depicted in the top view of Figure 12. The piping additionally serves as support structure for the device. The piping terminates in 4 water pickup heads located 2-3 in. below the water surface to establish a flow gradient in the direction of the central tank. The exhaust of the flow regime is directed to permit further concentration of the oil (see Figure 16).

Level Detector. The level detector is a differential pressure transmitter which senses the variation in pressure against a flexible diaphragm in a pneumatic column. The variation is caused by changes in level of water/oil in the central tank of the recovery device - and is depicted in Figure 11. The differential pressure transmitter is air powered and sends a signal to the auto/hand set point controller which provides control signals to activate the pump which drains the central tank. If for example, a large wave of water/oil suddently enters the central tank the pressure transmitter sends a proportional signal to the controller and then to the pump telling it to increase speed of pumping. Also, as back up to this system a buoyant float is used to sense major changes of level and activate the wier to close (that is, lift) or prevent (momentarily) further water/oil inflow. The buoyant float trips a whisker valve which bleeds an air line to the snap acting relay. When the pressure is slightly reduced the relay trips and air supply to the actuators is shut off. The springs of the actuators then lift the wier and close off water flow. Thus, the system "fails-safe" in the situation of loss of air power or in the case of large water disturbances into the central tank.

Bridge. The bridge of the device serves as the level reference point and the area for mounting the actuators and control elements. It is constructed as a torsion box beam with a foamed core to provide strength, stiffness and light weight.

Testing. The completed device was supported from an A-Frame gantry and tested in an 18 ft. diameter tank with a 4 ft. depth. Approximately 3-1/2 ft. of water were placed in the tank. The design of the device was aimed at a shallow draft situation. Approximately 30 gals of oil were placed on the surface of the tank and recovered in tests on the system. Such an oil slick is less than the thickness of oil recoverable by straight vacuum techniques. Figure 17 illustrates the test area set up and floor plan. Figure 18 is a photograph of the test area. The rapidity of collection observed in these tests proved that such thin slicks can be treated by the air modulated vacuum recovery method. The results of several tests are presented in Table 14. The results of the tests show recovery rates of 450 gal/hr of oil. Under optimum operating conditions the water content of the recovered oil was observed qualitatively to be <10 volume percent. (Figures 19 and 20 present alternate photographs of the oil recovery operation.)

TABLE 14

Results of AMVOR Device Oil Recovery Tests

Test	Time to Initialize Test Minutes	Time of Vacuum Recovery Minutes	Quantity Recovered Gal	Rate of Recovery Gal/Hr
1	10	15	38	152
2	10	10	35	210
3	8	12	37	165
4	5	7	30	229
5	6	5	32	384
6	6	8	33	248
7	8	4	31	465

The tests were conducted in the following manner. Approximately 25-30 gals of oil were placed on the surface of the tank (254 sq. ft.). The oil quantity was sufficient to spread to form a slick of ~4 mm thickness. The point of this test was to observe the time and manner of recovery of

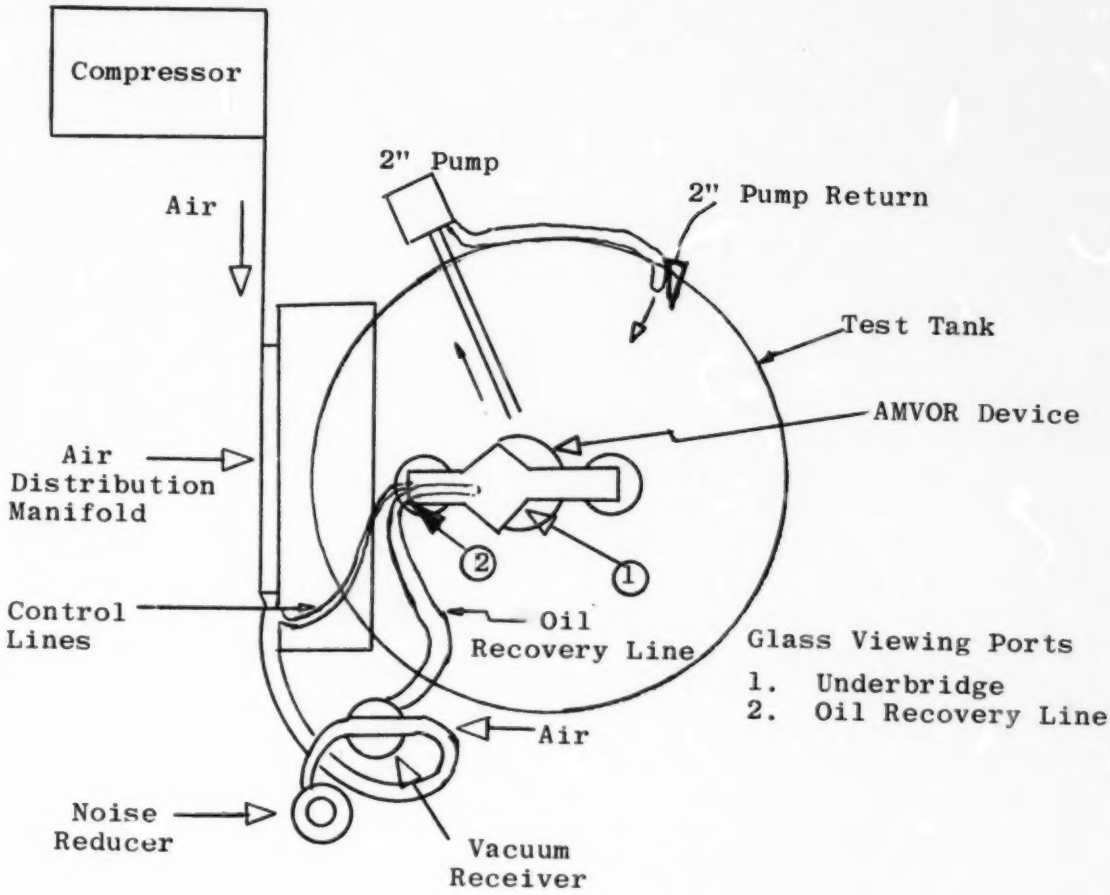

FIGURE 17

Floor Plan-Test Area

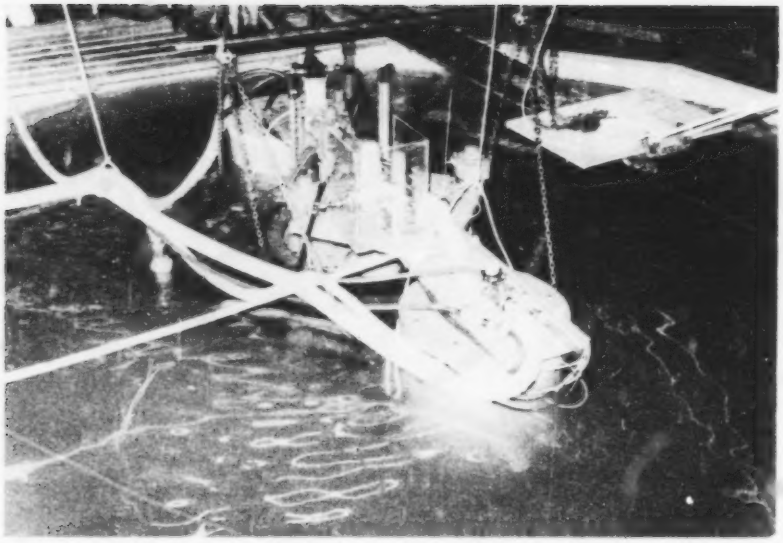

FIGURE 18. Photograph of AMVOR Device in Test Tank

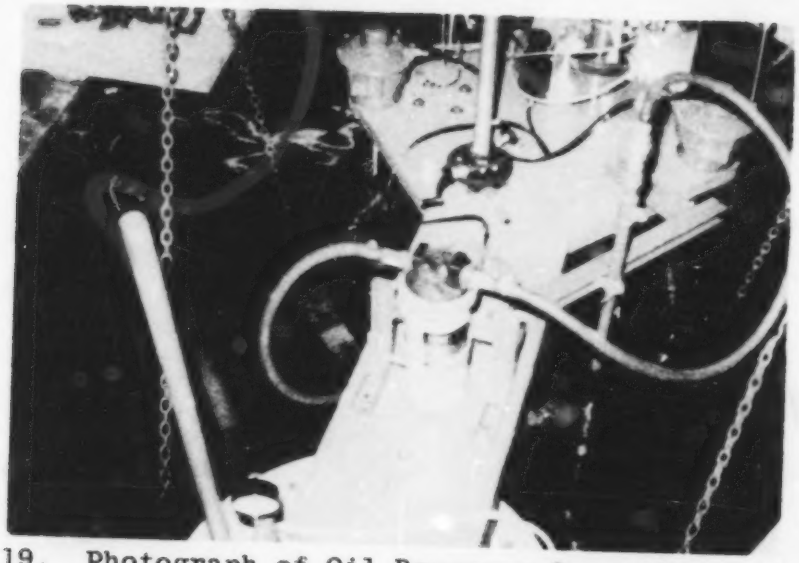

FIGURE 19. Photograph of Oil Recovery Operation with AMVOR Device (View A)

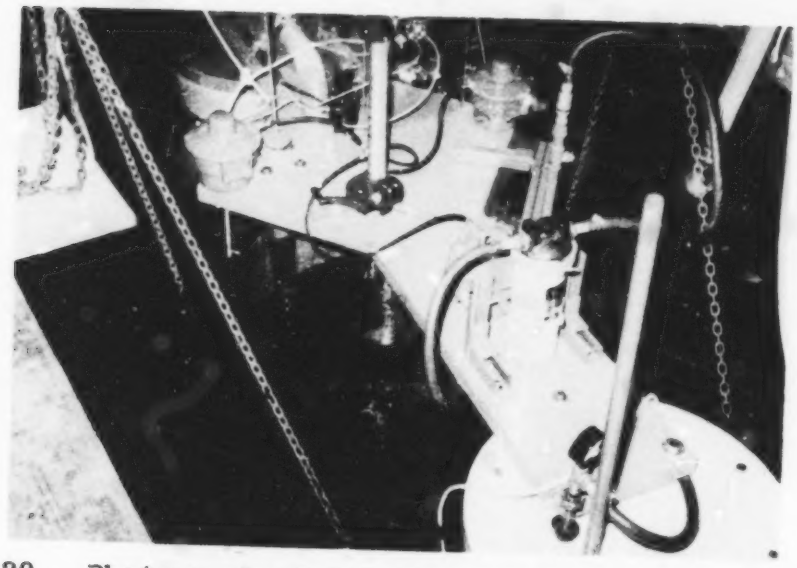

FIGURE 20. Photograph of Oil Recovery Operation with AMVOR Device (View B)

such a thin slick. The surfactant was added to oil to aid foam generation. The system was in a flooded condition. The compressor was started, controls set in manual mode until the proper floating trim of the device was attained, then switched to auto-level control mode. The vacuum was applied and the oil foam collected. Observation of the glass sections of the recovery lines permitted a visual check on the system performance. The quantity of recovered oil was measured by change in content of the receiver with time and the rate of recovery could then be determined. Approximately, 5 minutes were required to stabilize the system in the running condition. After this time, the vacuum was turned on and about 4 minutes on the average were required to accumulate the oil in the receiver drum. The water content was kept to a minimum through proper control of the vacuum collection head. The recovery of the 30 gals of oil proceeded at a rate of about 450 gals/hr. The water content of the oil collected under present optimum conditions was less than 10% and it is believed that lower water contents can be routinely obtained with further testing and optimization.

Greater quantities of oil could be placed on this test tank surface but they would appear to bias the result toward higher values for pumping transfer. The system is one which can rapidly recover the oil from quiet water surfaces. Further tests are warranted under field conditions for the system. When the discharge from the water pumps is rapid disturbances are generated on the water surface which is about three inch waves with a wave length of about two feet. Such disturbances are easily handled by the device. Modification or addition to the device to handle larger disturbances will be considered in the discussion.

SECTION VI

DISCUSSION

Most recovery devices currently have severe limitations with respect to (a) sustained oil recovery and (b) oil recovery in disturbed water conditions.

The philosophy of design of the AMVOR device in the program has been to attempt to increase the efficiency of operation of one of the more effective methods - namely vacuum suction. Vacuum suction has been considered by many to be the most economical method of recovery when applicable, but before AMVOR it suffered from the problem of being unable to handle thin oil slicks.

The AMVOR technique generates an oil rich foam and at the same time permits modulation of the vacuum suction to eliminate the drawback of pulling too much water along with the oil. The system designed and successfully tested in this program overcomes this drawback and extends the range of application of the vacuum recovery technique to very thin oil slicks and further permits recovery of oil on cost efficient basis to below transparency in the oil film.

The prototype apparatus assembled in this problem embodied all the elements for remote field operation. The testing of the device was successful in rapidly recovering thin oil slicks from test tanks. The design of the device and its engineering parameters projects a capability of recovering oil under field conditions at the rate of 90 gal/min. The water capable of being treated by the device can be estimated at ~103,000 gal/hr over an 18' radius of influence as shown in Table 15. The weight of the present device permits it to be air transportable and rapidly deployed.

Preliminary indications from waves generated in the test tank are that recovery can proceed under disturbed water conditions. Wave action was generated by the water pump exhaust from the device. The wave action in the 18' diameter tank was approximately 3-4 inches peak to trough and 1 to 2 feet peak to peak. As the waves moved into the sump carrying oil the trim of the system responded rapidly due to increased pumping action. Oil was recovered under these conditions with a greater water content (~30% by volume).

The water content was routinely less than 10% under operation conditions. Time did not permit optimization to the levels of <3% water content exhibited routinely in the laboratory scale apparatus. The adaptability and parameter variation (i.e., trim, sparger levels, sparging rate, etc.)

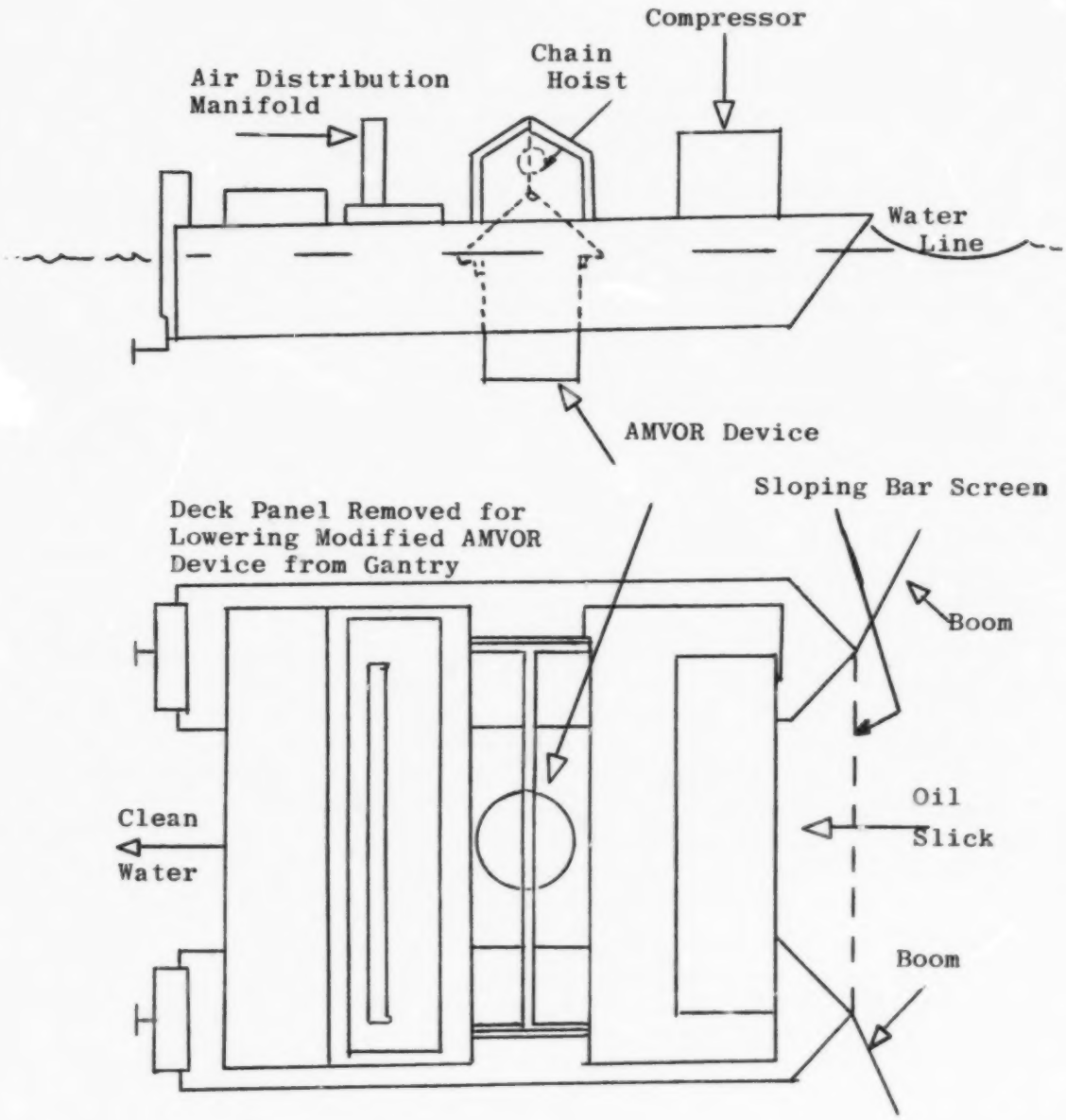

FIGURE 21

Plan of AMVOR Device in Field Operation with Catamaran Work Boat

is expected to permit the operation to attain such low water contents in recovered oil in further field testing.

TABLE 15

Summary of AMVOR Device Specifications

A. Demonstrated Performance in 18' Diameter Test Tank

Oil Slick Thickness (<4 mm) initial thickness 30 gal. oil

7500 Gal. Water

Recovery Rate 450 Gal. Oil/Per Hour

Final Oil Thickness - transparent oil sheen on surface

Area of Influence >9' Radius

Oil-Water Transfer Capacity 26,000 gph

B. Capability of AMVOR Device (Projected for Field Operations) (Based on Engineering Limitations of Elements)

Oil Slick Thickness Initial No Large Limit and No Lower Limit

Projected Recovery Rate ~90 Gal./Min

Oil/Water Treatment Volume ~102,500 Gal./Hr

$$\begin{array}{l} 7500 \text{ Gal } H_2O \\ + 30 \text{ Gal Oil} \end{array} \times \frac{60 \text{ min} \cdot \text{hr}^{-1}}{4 \text{ min recovery time}} = 102{,}500 \text{ Gal./Hr}$$

Area of Influence:

Conservative Estimate 18' Radius

Device and Accessory Elements Capable of Helicopter Air Transport and Air Droppable

Figure 21 illustrates how the device may be used with the aid of a catamaran work boat which has deck-panel removed. The catamaran, thus equipped may serve to test the device under field conditions. The equipment at hand would require only

minor modification to include debris handling elements. Such elements might include a bar screen which would also serve to moderate the effects of small waves. The catamaran thus described would function with the aid of a deployed oil containment boom.

The device is capable of remote operation with minor attention from an operator.

Figure 22 is an aerial view of the Cuyahoga River and one can see the many thin oil slicks present along its course. These are further identified by circles on the photograph. The lower Cuyahoga River and Navigation Channel are known to be seriously degraded. "Throughout the Cleveland area (it) is a virtual waste treatment lagoon choked at times with debris, oils, scums, and organic floating sludges. The river appears to be chocolate brown or rust colored and most of the year has no visible life." (10) Fifteen industrial concerns have been recognized as contributors to oil and grease pollution in the Cuyahoga River (11). The total quantity of oil influent to the Cuyahoga River is unknown. Only three of the fifteen contributors have been gauged and they alone add approximately a ton of oil per day to the river (2). Thus, the Cuyahoga is typical of many heavily traveled rivers in the heart of an industrial complex and would serve well to provide a field test area for the AMVOR device.

The estimated materials and equipment cost of the AMVOR device is approximately $5,800 (not including rental or purchase of an air compressor). The catamaran system described above is estimated to cost $12,000.

FIGURE 22. Oblique Aerial View of Cuyahoga River Valley and Cleveland Harbor Showing Oil Accumulation (Courtesy of Aerial Surveys, Inc., Cleveland, Ohio)

SECTION VII

ACKNOWLEDGEMENTS

The support of the Mayor of the City of Cleveland, Ohio, Honorable Carl B. Stokes, is acknowledged with sincere thanks. The efforts and sponsorship of this program by Mr. Benjamin S. Stefanski, II, former Director of Public Utilities, City of Cleveland, are gratefully acknowledged.

Dr. Edward J. Martin, Director of the Cleveland Clean Water Task Force was Project Director.

Special thanks are extended to Mr. Larry Politzer, Grant Coordinator and Mr. David A. Carpenter, Industrial Coordinator, both of the Clean Water Task Force for their counsel and interest.

Mr. Ray Roth, Assistant Commissioner and Mr. James Schafer of the Bureau of Waste Water Quality Control, City of Cleveland provided valuable assistance and samples of waste oil acquired from the Cuyahoga River for testing and evaluation.

Mr. Richard W. Sicka, Group Leader, Horizons Incorporated was program manager and directed the experimental and construction phases of the program.

A number of members of Horizons Incorporated technical staff provided valuable assistance throughout the program. The effort and counsel of Dr. Selwyn H. Rose are gratefully acknowledged. J. J. Bikerman served as a special consultant in the surface chemistry aspects of the program. Dr. J. S. Thornton and J. Jacobs aided in the engineering design of the model device.

Special thanks are extended to D. Wheeler for his assistance in all phases of the program.

The support of the project by the Environmental Protection Agency and the help and interest provided by Mr. Harold Bernard, Mr. Ralph Rhodes and Mr. Clifford Risely, Jr., the Grant Project Officer are acknowledged with sincere thanks.

SECTION VIII

REFERENCES

1. "Combating Pollution Created by Oil Spills", A. D. Little, Inc., Cambridge, Mass., June 1969, for U. S. Coast Guard, Dept. of Transportation, Vol. 1 Methods. AD 696 635.

2. "Study of Equipment and Methods for Removing Oil from Harbor Waters", August 1969, Battelle Memorial Institute, Richland, Washington. AD 696 980.

3. "Oil Spillage Study:Literature Search and Critical Evaluation for Selection of Promising Techniques", Battelle Memorial Institute, Richland, Washington. AD 666 289.

4. "Systems Study of Oil Spill Cleanup Procedures Volume I:Analysis of Oil Spills and Control Materials", February 1970, Dillingham Corporation, La Jolla, Calif.

5. A. L. Scott and S. E. Gifford, "Removal of Oil from Harbor Waters", Technical Note N-964, Naval Civil Engineering Lab., Port Hueneme, Calif., February 1968.

6. G. Beduhn, "Removal of Oil and Debris from Harbor Waters", Technical Note 825, Naval Civil Engineering Lab., Port Hueneme, Calif., 1966.

7. N. A. D'Arcy, "Dissolved Air Flotation Separates Oil from Waste Water", Oil and Gas J. 50, No. 27, 319-22 1951.

8. A. H. Beebe, "Soluble Oil Wastes by Pressure Flotation", Sewage and Industrial Wastes, 25, No. 11, 1314-23, November 1953.

9. T. Boyd, et. al., "Flotation of Hydrocarbon Impurities in Water", U. S. 2,759,607, August 21, 1956.

10. Lake Erie Report, A Plan for Water Pollution Control, U. S. Dept. of the Interior, Federal Water Pollution Control Administration, Great Lakes Region, August 1968, p. 45.

11. ibid, page 101.

SELECTED WATER RESOURCES ABSTRACTS

INPUT TRANSACTION FORM

1. Report No.

2.

W

5. Report Date

6.

8. Performing Organization Report No.

AIR MODULATED VACUUM OIL RECOVERY COLLECTION OF SPILLED OIL (FOAMS),

Sicka, R. W.

City of Cleveland

15080 EHP

13. Type of Report and Period Covered

12. Sponsoring Organization

Environmental Protection Agency report number EPA-R2-72-033, August 1972.

A method of oil harvesting was developed involving the air modulated vacuum oil recovery technique. The collection of thin oil slicks from water surfaces by the method of oil foam generation and air modulation of vacuum oil recovery was developed in an experimental and engineering design project. This resulted through construction of a prototype device which has proved capable of rapidly recovering thin slicks of oil from water surfaces. Very little water is present in the recovered oil (<10% by volume).

The range of application of vacuum oil recovery has been successfully extended to thin oil slicks (<4 mm) through the application of controlled air modulation and oil foam generation. The prototype device was designed for remote operation and hence possesses self contained power sources.

The two foot diameter prototype demonstrated performance by treating 7500 gallons of oil and water in a test tank in 4 minutes and recovering the oil at a rate of 450 gal/hr from this very thin oil slick. Thicker slicks could be recovered much more rapidly.

The capabilities of treating much greater quantities of oil/water by this prototype device are dicsussed.

17a. Descriptors

*Oil Pollution - Recovery, *Vacuum Oil Skimming, *Air Modulation Oil Removal, *Oil Foams

17b. Identifiers

*Foams, Oil Skimming

19. Security Class. (Report)

20. Security Class. (Page)

21. No. of Pages

22. Price

Send To:

WATER RESOURCES SCIENTIFIC INFORMATION CENTER
U S DEPARTMENT OF THE INTERIOR
WASHINGTON D C 20240

Richard W. Sicka | Horizons Incorporated

☆ U. S. GOVERNMENT PRINTING OFFICE : 1972-514-148/48